Project Title :PROPOSED AFFORDABLE RESIDENTIAL MULTISTORIED BUILDING

DATE	27-03-2022
SHEET NO.	1

Proposal Date: (If revised)

Proposal File No.	PAMC/BP/000/W/BP/21
Owner's Name	M. KEVIN, SEBASTIAN, JENNY, SHIBU, SUNITA & PARTNERS, ANITA KURIAKOSE
Wards	117
Plot No.	87/.88
Village Name	TRIVANDRUM
Use	Residential
Site Area	Low Income group and EWS Housing

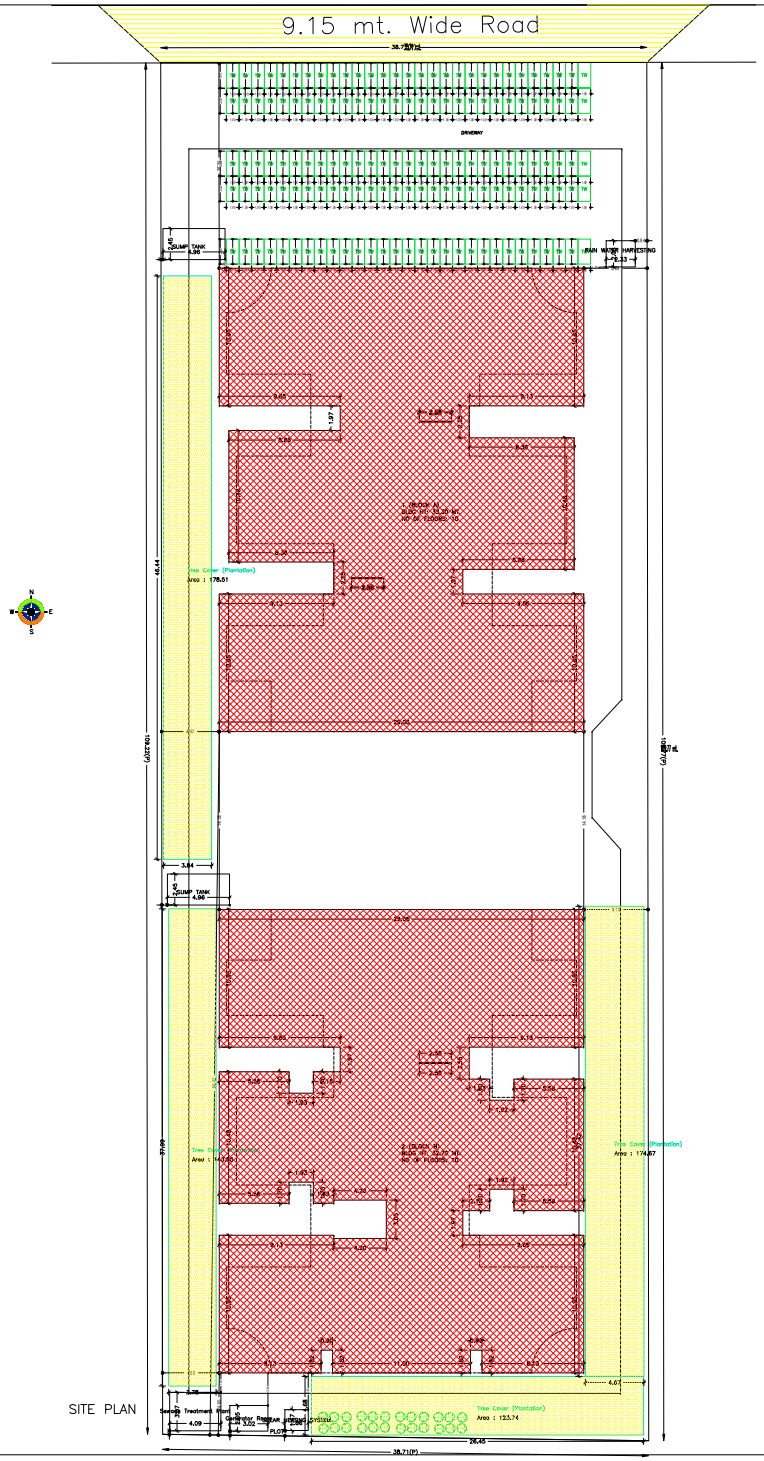

SITE PLAN

AREA STATEMENT FOR FAR	
AREA OF PLOT (AS PER DOCUMENT)	1.2000 ACRES / 7.4.8
	1.2000 ACRES / 4855.9 SQ.M
PROJECT DETAIL	
Authority: (Corporation/ Municipality/ Panchayat)	Corporation
Use of Building	Residential
Nature of the Building	Residential Low Income group and EWS Housing
Location of Building	Within Municipal Corporation limits
Number of Blocks	2
Number of Units	144
Number of Units in Low Income group and EWS Housing	144
Proposed Type of Building	Multi Storied Building
Proposed Type of Building	Apartment
Number of Units in Residential Building	144
Number of Units in Other Use	0
Total Built Up Area	10,000.00
PLOT AREA	
Area of Plot (Minimum)	4855.9
NET AREA OF PLOT (Minimum Area of Plot - Deductions from Gross Plot Area)	(A-Deductions) 4855.9
Deductions: Reserve Plot/ road widening Plot/ road widening Plot	0.00
	0.00
TOTAL AREA OF PLOT(Net Area of Plot - Area deducted towards road widening)	(A-Deductions) 4855.9
Total area for FAR (Area of Plot + Area of road widening Area)	(A-Deductions) 4855.9
Total area for FAR (Area of Plot + Area of road widening Area)	(A-Deductions) 4855.9
COVERAGE AREA	
Ground Floor Coverage area (40.00 %)	1942.36
Proposed Coverage Area (36.01 %)	1748.13
Total Area Coverage Area (36.01 %)	1748.13
Extent of coverage at top floor (%)	18.00
FAR/FSI	
Total FAR Area (4.00)	19423.6
Total Area Built Area	19423.6
Residential FAR	19423.6
Commercial FAR	0.00
Proposed FAR Area	19423.6
Total Proposed FAR Area	19423.6
Extent of FAR Availed	4.00
Balance FAR Area	0.00
BUILT UP AREA CHECK	
Total Proposed Built Up Area	29011.82
PARKING STAND	
Car Parking Area	3944.13 (10.00 %)
OWNER DETAILS	
OWNER (Regd)	M/S K.S.CONSTRUCTIONS, THIRUVATTIYATTIL PARTHIVEN KART, ALAPPUZHA

Project Title :PROPOSED AFFORDABLE RESIDENTIAL MULTISTORIED BUILDING

DATE	27.03.2022
SHEET NO.	2

Proposal Details of Smart Z

Proposal File No.	PMC/BP/000/2022/
Owner's Name	M. KEVIN, SHANTHI JENIFER, SHIBU DEVI & PARTNERS AND 1 KUSUMA
Website	117
Plot No.	81,82
Village Name	TPK
Use	Field detail
Site Area	Low income sp cup unit ENS Housing

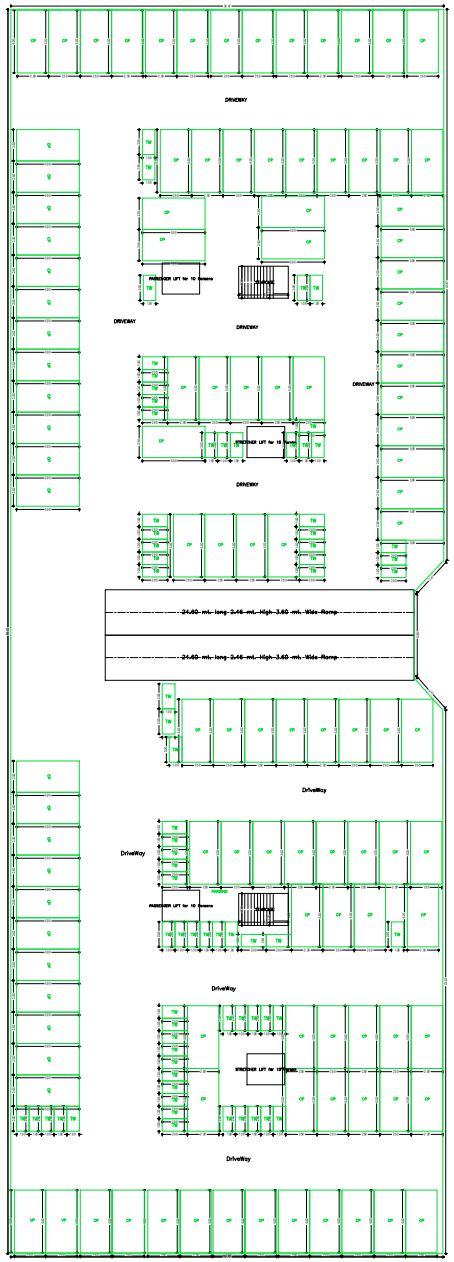

BASEMENT FLOOR PLAN
(SCALE 1:100)

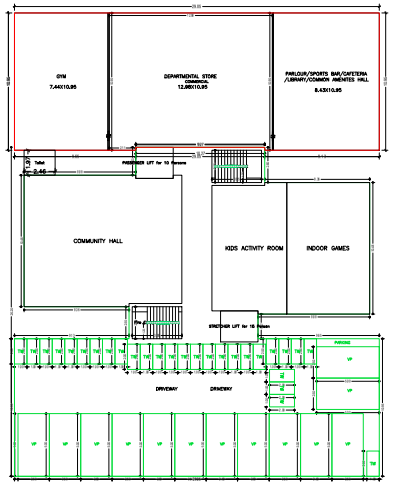

GROUND FLOOR PLAN
(Proposed)
(SCALE 1:100)

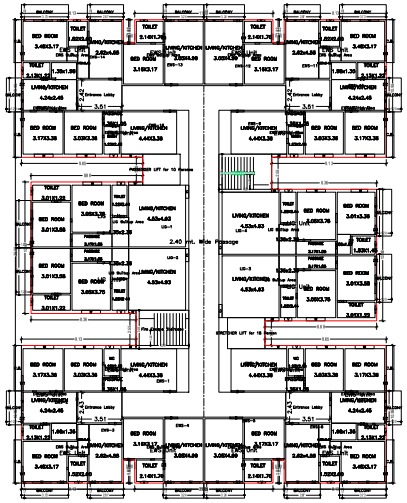

FIRST FLOOR PLAN
(Proposed)
(SCALE 1:100)

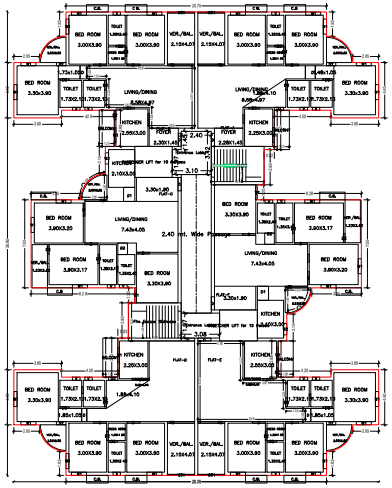

TYPICAL – 2–7– FLOOR PLAN
(Proposed)
(SCALE 1:100)

UnitBUA Table for Building :1 (BLOCK A)

Floor	Name	Length(in ft)	Width(in ft)	Area(in Sqft)	No. of Rooms	No. of Tenement
GROUND FLOOR PLAN	COMMUNAL	94.0'0"	215.0"	20.24	1	1
FIRST FLOOR PLAN	2BED	2250.1.50"	33.0"	38.50	1	29
	2BED-S	2250.1.50"	27.0"	31.15	1	
	2BED-S	2250.1.50"	27.0"	31.15	1	
	2BED-S	2250.1.50"	29.0"	33.70	1	
	2BED-S	2250.1.50"	29.0"	33.70	1	
	2BED-S	2250.1.50"	29.0"	33.70	1	
	2BED-S	2250.1.50"	29.0"	33.70	1	
	2BED-S	2250.1.50"	27.0"	31.15	1	
	2BED	2250.1.50"	33.0"	38.50

Project Title :PROPOSED AFFORDABLE RESIDENTIAL MULTISTORIED BUILDING

DATE	27-03-2022
SHEET NO.	1

Proposal Date of creation :	
Proposal File No.	PAMC/BP/000/2022/1
Owner's Name	M/S SOHAM MODI REALTY PUNE THROUGH ITS PARTNERS AMIT KUSHWAL
Website	117
Plot No.	87, 88
Village Name	TIRNI
Use	Residential
Sub Use	Low income sqr mqr add. EWS Housing

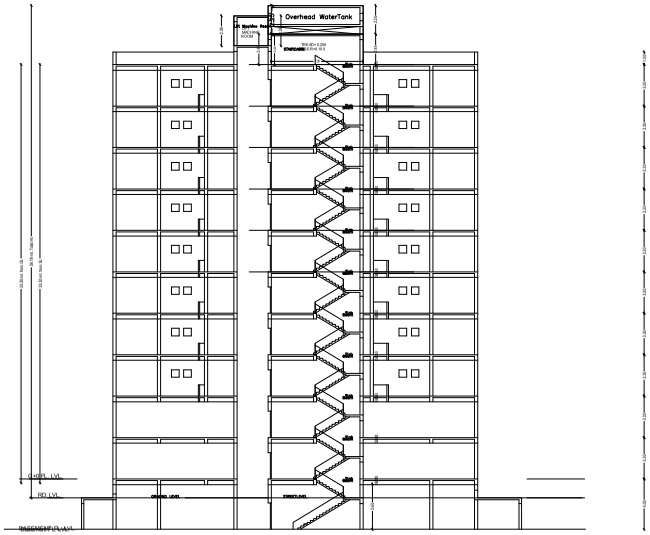

SECTION=X-X (BLOCK-A ,B)
SCALE 1:100

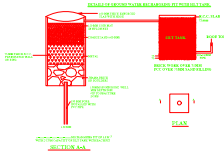

DESIGN OF RECHARGE PIT FOR ROOF TOP RAIN WATER HARVESTING

Building :1 (BLOCK A)

Floor Name	Gross Building Area	Deductions Area in Sq. Mtrs. Stair Case	Deductions Area in Sq. Mtrs. Ramp	Deductions (Area in Sq.mt.) Stair Cover	Lift	Servant	Parking (Basement)	Parking	Resi.	Commercial	Total	Proposed F.S.I Area (Sq.mt) Resi.	Commercial	F.S.I. 1.0 (Sq.mt.) Stair	Total Consumed Additional FSI (Sq.mt)	Tenements	Carpet Area after Deduct Tenements
Basement Floor	1390.39	0.00	2200.00	0.00	20.00	0.00	0.00	2192.44	0.00	0.00	2212	0.00	0.00	2212	0.00	0.00	0.00
Stilt Floor	874.03	0.00	874.04	0.00	0.00	0.00	0.00	408.00	465.73	0.00	874.03	0.00	0.00	874.03	465.73	07	0.00
Lower Grd. Flr.	1583.77	0.00	1583.78	1201	14.00	29.25	30.00	0.00	1518.48	0.00	0.00	1518.48	0.00	1518.48	0.00	16	2774
Upper Grd. Flr.	800.00	0.00	800.00	1201	14.00	14.00	15.00	0.00	753.00	0.00	0.00	753.00	0.00	753.00	0.00	08	0.00
First Floor	800.00	0.00	800.00	1201	14.00	14.00	15.00	0.00	753.00	0.00	0.00	753.00	0.00	753.00	0.00	08	0.00
Second Floor	800.00	0.00	800.00	1201	14.00	14.00	15.00	0.00	753.00	0.00	0.00	753.00	0.00	753.00	0.00	08	0.00
Third Floor	800.00	0.00	800.00	1201	14.00	14.00	15.00	0.00	753.00	0.00	0.00	753.00	0.00	753.00	0.00	08	0.00
Fourth Floor	800.00	0.00	800.00	1201	14.00	14.00	15.00	0.00	753.00	0.00	0.00	753.00	0.00	753.00	0.00	08	0.00
Fifth Floor	800.00	0.00	800.00	1201	14.00	14.00	15.00	0.00	753.00	0.00	0.00	753.00	0.00	753.00	0.00	08	0.00
Sixth Floor	800.00	0.00	800.00	1201	14.00	14.00	15.00	0.00	753.00	0.00	0.00	753.00	0.00	753.00	0.00	08	0.00
Seventh Floor	800.00	0.00	800.00	1201	14.00	14.00	15.00	0.00	753.00	0.00	0.00	753.00	0.00	753.00	0.00	08	0.00
Eighth Floor	800.00	0.00	800.00	1201	14.00	14.00	15.00	0.00	753.00	0.00	0.00	753.00	0.00	753.00	0.00	08	0.00
Ninth Floor	800.00	0.00	800.00	1201	14.00	14.00	15.00	0.00	753.00	0.00	0.00	753.00	0.00	753.00	0.00	08	0.00
Terrace Floor	0.00	0.00	0.00	0.00	0.00	0.00	0.00	0.00	0.00	0.00	0.00	0.00	0.00	0.00	0.00	00	0.00
Total	10183.19	0.00	10183.19	10.8	126.00	126.25	135.00	2192.44	7991.73	0.00	10183.19	7991.73	0.00	10183.19	465.73	07	2774.00
Number of same Buildings	1																
Total	10183.19	0.00	10183.19	10.8	126.00	126.25	135.00	2192.44	7991.73	0.00	10183.19	7991.73	0.00	10183.19	465.73	07	2774.00

SCHEDULE OF DOORS

BUILDING NAME	NAME	LENGTH	HEIGHT	NOS
BUILDING A	D	0.90	2.10	8
BUILDING A	D1	0.90	2.10	21
BUILDING A	D2	0.8	2.10	4
BUILDING A	D3	1.05	2.10	4
BUILDING A	D4	1.50	2.10	60
BUILDING A	D5	1.20	2.10	60
BUILDING A	D6	1.75	2.10	16
BUILDING A	D7	1.75	2.10	16
BUILDING A	D8	1.75	2.10	16
BUILDING A	D9	1.5	2.10	32
BUILDING A	D10	1.5	2.10	32

SCHEDULE OF WINDOW/VENTILATION:

BUILDING NAME	NAME	LENGTH	HEIGHT	NOS
BUILDING A	W	0.9	1.8	32
BUILDING A	W1	1.2	1.8	128
BUILDING A	W2	0.9	1.2	32
BUILDING A	W3	1.8	1.8	32
BUILDING A	W4	1.5	1.8	32
BUILDING A	W5	1.2	1.8	192
BUILDING A	W6	1.2	1.8	96
BUILDING A	W7	1.0	1.8	32
BUILDING A	W8	1.0	1.8	32
BUILDING A	W9	1.0	1.8	32
BUILDING A	W10	1.75	1.8	32
BUILDING A	W11	1.2	1.8	32
BUILDING A	W12	1.5	1.8	32
BUILDING A	W13	1.5	1.8	32
BUILDING A	W14	1.5	1.8	32
BUILDING A

Project Title :PROPOSED AFFORDABLE RESIDENTIAL MULTISTORIED BUILDING

DATE	27-03-2022
SHEET NO.	2

Proposed Residential Apartment

Proposal No.	KMC/BP/2021/0012
Owner Name	M/S SOHAM BUILDERS & PROMOTERS PVT LTD
Khata	117
Plot No.	81,82
Village Name	TRL
Use	Residential
Site Area	Less than or equ ual 1245 Hearing

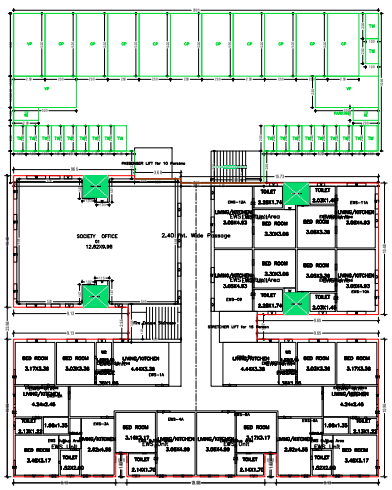

GROUND FLOOR PLAN
(Proposed)
(SCALE 1:100)

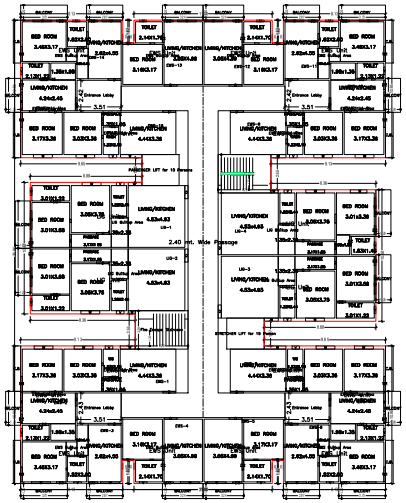

FIRST FLOOR PLAN
(Proposed)
(SCALE 1:100)

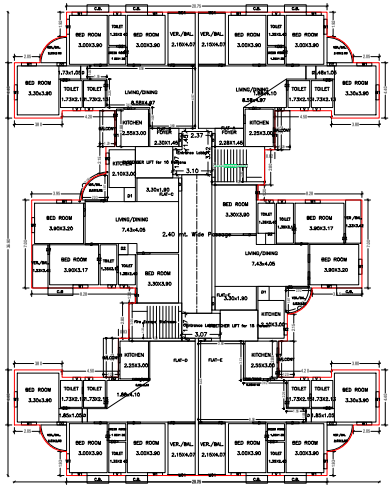

TYPICAL – 2~9~ FLOOR PLAN
(Proposed)
(SCALE 1:100)

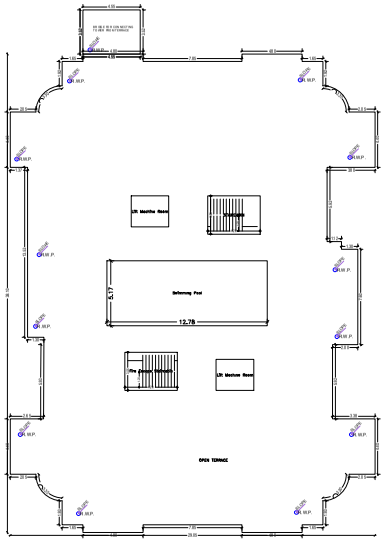

TERRACE FLOOR PLAN
(SCALE 1:100)

Building :2 (BLOCK B)

Floor Name	Gross Built Up Area (Sq.Mts.)	Deductions (Area in Sq.mts.)					Proposed Net Area (Sq.mts.)	Add Lift Room (Sq.mts)	Total FAR Area (Sq.mts)	Total Calculated Units as per Area (Sq.mts)	Tenements	Carpet Area (Sq.mts)
		Common Area (Sq.mts.)	Stair Case	Lift	Ramp	Parking						
GROUND FLOOR	1040	15.24	117.77	12.61	0.00	0.00	1014.39	0.00	1014.39	10.14	13	24.84
FIRST FLOOR	1011.77	3.19	103.38	12.61	14.79	19.29	858.51	0.00	858.51	8.59	10	21.14
TYPICAL FLOOR	858.19	3.19	103.38	12.61	14.79	14.40	710.41	0.00	710.41	7.10	8	18.00