Project Title :BUILDING

DATE	20-10-2023
SHEET NO.	1
	-

Proposal Basic Information

Proposal File No.	RMC/AH/0423/W05/2022
Owner Name	UGNA Buildwell Pvt. Ltd. through Director Mr. Ajit Kumar
Khata No	117,49,03
Plot No	2381, 2386, 2387, 2388, 2389, 2413
Village Name	BADAGAAI
Use	Residential
SubUse	Low income group and EWS Housing

AREA STATEMENT RANCHI MUNICIPAL CORPORATION	VERSION NO.: 1.0.66 VERSION DATE: 16/10/2020	
PROJECT DETAIL:		
Region: JHARKHAND URBAN LOCAL BODIES	Plot Use: Residential	
District: RANCHI	Plot SubUse: Low income group and EWS Housing	
Authority: RANCHI MUNICIPAL CORPORATION	PlotNearbyReligiousStructure: NA	
Inward_No: RMC/AH/0423/W05/2022	Plot/SubPlot No: 2381, 2386, 2387, 2388, 2389, 2413	
Application Type: General Proposal	North: Plot No. - OTHERS PLOT	
Project Type: Affordable Housing	South: Plot No. - OTHER PLOT	
Nature of Development: New	East: Road Width - 7.5	
Location of Development Area: Old Area	West: Plot No. - OTHERS PLOT	
AREA DETAILS:		SQ.MT.
AREA OF PLOT (Minimum)	(A)	8424.00
NET AREA OF PLOT(Gross Plot Area - Deduction from Gross Plot area)	(A-Deductions)	8424.00
Deduction for Balance Plot Area(from Gross Plot Area)		
Common Plot		991.16
Total		991.16
BALANCE AREA OF PLOT(Net Plot Area - Recreational/Amenity space)	(A-Deductions)	7432.84
PLOT AREA FOR COVERAGE(Net Plot Area)	(A-Deductions)	8424.00
Plot Area for FAR (Net Plot Area + RoadWidening Area)	(A-Deductions)	8424.00
COVERAGE CHECK		
Permissible Coverage area (50.00 %)		4212.00
Proposed Coverage Area (29.24 %)		2463.25
Total Prop. Coverage Area (29.24 %)		2463.25
Balance coverage area (20.76 %)		1748.75
FAR CHECK		
Perm. FAR Area (3.500)		29484.00
Total Perm. FAR area		29484.00
Residential FAR		28826.70
Special FAR		473.42
Proposed FAR Area		29453.78
Total Proposed FAR Area		29453.78
Consumed FAR (Factor)		3.50
Balance FAR Area		30.21
BUILT UP AREA CHECK		
Total Proposed BuiltUp Area		41638.39
ARCHITECT (Regd)		MANOJ KUMAR
ENGGINEER (Regd)		
SUPERVISOR (Regd)		
OWNER (Regd)		UGNA Buildwell Pvt. Ltd. through Director Mr. Ajit Kumar
DEVELOPMENT AUTHORITY		LOCAL BODY

COLOR INDEX

PLOT BOUNDARY	⬛
ABUTTING ROAD	🟩
PROPOSED CONSTRUCTION	🟥
COMMON PLOT	🟨
ROAD WIDENING AREA	🟨
EXISTING (To be retained)	🟦
EXISTING (To be demolished)	🟨

Buildingwise Floor FAR Details

Floor Name	Building Name								Total	
	A (BUILDING)		B (BUILDING)		C (BUILDING)		D (BUILDING)			
	Proposed Built Up Area (Sq.mt.)	Proposed FAR Area (Sq.mt.)	Proposed Built Up Area (Sq.mt.)	Proposed FAR Area (Sq.mt.)	Proposed Built Up Area (Sq.mt.)	Proposed FAR Area (Sq.mt.)	Proposed Built Up Area (Sq.mt.)	Proposed FAR Area (Sq.mt.)	Total Proposed Built Up Area (Sq.mt.)	Total FAR Area (Sq.mt.)
Basement Floor	0.00	0.00	4885.61	47.20	0.00	0.00	0.00	0.00	4885.61	47.20
Ground And Parking Floor	620.90	25.00	1184.88	40.58	418.16	27.95	239.31	12.93	2463.25	106.46
First Floor	661.34	580.88	1255.66	1094.34	470.23	373.77	239.31	239.31	2626.54	2288.30
Second Floor	678.04	580.88	1256.04	1094.72	470.23	373.77	234.11	234.11	2638.42	2283.48
Third Floor	677.88	592.09	1256.04	1094.72	470.23	373.77	0.00	0.00	2404.15	2060.58
Fourth Floor	678.04	580.88	1256.04	1094.72	470.23	373.77	0.00	0.00	2404.31	2049.37
Fifth Floor	677.88	592.09	1256.04	1094.72	470.23	373.77	0.00	0.00	2404.15	2060.58
Sixth Floor	678.04	580.88	1256.04	1094.72	470.23	373.77	0.00	0.00	2404.31	2049.37
Seventh Floor	677.88	592.09	1256.04	1094.72	470.23	373.77	0.00	0.00	2404.15	2060.58
Eighth Floor	678.04	580.88	1256.04	1094.72	470.23	373.77	0.00	0.00	2404.31	2049.37
Ninth Floor	677.88	592.09	1256.04	1094.72	470.23	373.77	0.00	0.00	2404.15	2060.58
Tenth Floor	678.04	580.88	1256.04	1094.72	470.23	373.77	0.00	0.00	2404.31	2049.37
Eleventh Floor	677.88	592.09	1256.04	1094.72	470.23	373.77	0.00	0.00	2404.15	2060.58
Twelfth Floor	678.04	580.88	1256.04	1094.72	470.23	373.77	0.00	0.00	2404.31	2049.37
Thirteenth Floor	677.88	592.09	1256.04	1094.72	470.23	373.77	0.00	0.00	2404.15	2060.58
Fourteenth Floor	0.00	0.00	1256.04	1094.72	470.23	373.77	0.00	0.00	1726.27	1468.49
Fifteenth Floor	0.00	0.00	0.00	0.00	470.23	373.77	0.00	0.00	470.23	373.77
Sixteenth Floor	0.00	0.00	0.00	0.00	348.64	275.60	0.00	0.00	348.64	275.60
Terrace Floor	0.00	0.00	0.00	0.00	0.00	0.00	32.99	0.00	32.99	0.00
Total :	9417.76	7643.70	23654.67	15413.48	7820.25	5910.10	745.72	486.35	41638.40	29453.63

Building USE/SUBUSE Details

Building Name	Building Use	Building SubUse	Building Structure
A (BUILDING)	Residential	Low income group and EWS Housing	Multistoried
B (BUILDING)	Residential	Low income group and EWS Housing	Multistoried
C (BUILDING)	Residential	Low income group and EWS Housing	Multistoried
D (BUILDING)	Assembly	Club	Non-Highrise

FAR & Tenement Details (Table 4c-1)

Building	No. of Same Bldg	Gross Built Up Area (Sq.mt.)	Deductions From Gross BUA(Area in Sq.mt.)	Total Built Up Area (Sq.mt.)	Deductions (Area in Sq.mt.)					Proposed FAR Area (Sq.mt.)		Add Area In FAR (Sq.mt.)	Total FAR Area (Sq.mt.)	Total Consumed Additional FAR Area (Sq.mt.)	Tnmt (No.)	Carpet Area other than Tenement
			Cutout		StairCase	Lift	Balcony	Accessory Use	Parking	Resi.	Assembly	Stair				
A (BUILDING)	1	9485.85	68.09	9417.76	89.68	179.27	920.42	0.00	584.69	7618.70	0.00	11.21	7643.70	7643.70	40	0.00
B (BUILDING)	1	23998.53	343.86	23654.67	287.14	362.87	1676.08	0.00	5677.22	15325.70	0.00	65.39	15413.48	15413.48	112	0.00
C (BUILDING)	1	8091.29	271.04	7820.25	225.76	211.84	1095.94	0.00	376.61	5882.15	0.00	14.71	5910.10	5910.10	94	5847.53
D (BUILDING)	1	745.72	0.00	745.72	0.00	0.00	0.00	32.99	226.38	0.00	473.42	12.93	486.35	486.35	02	0.00
Grand Total :	4	42321.39	682.99	41638.40	602.58	753.98	3692.44	32.99	6864.90	28826.55	473.42	104.24	29453.63	29453.63	248	5847.53

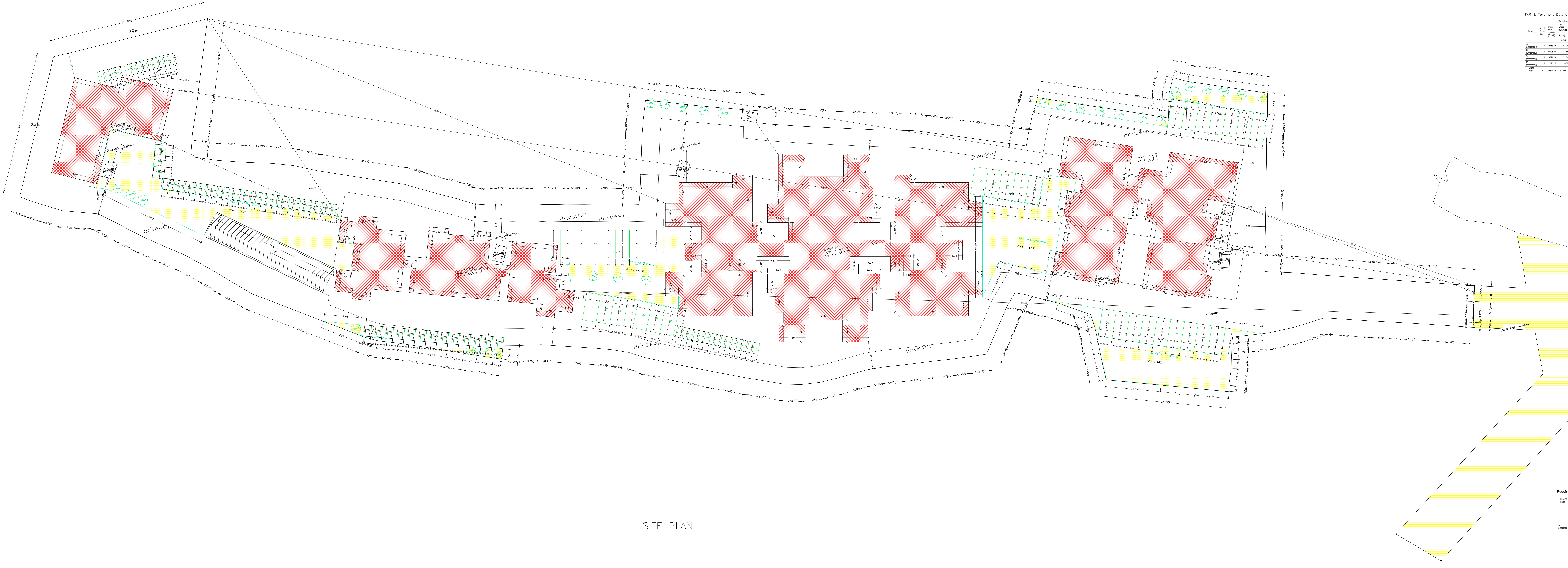

SITE PLAN

Required Parking(Table 7a)

Building Name	Type	SubUse	Area (Sq.mt.)	Units		Car			Visitors Car			TwoWheeler		
				Reqd.	Prop.	Reqd./Unit	Reqd.	Prop.	Reqd./Unit	Reqd.	Prop.	Reqd./Unit	Reqd.	Prop.
A (BUILDING)	Residential	Low income group and EWS Housing	0 - 140	1	2.00	1.00	2	-	-	-	-	-	-	-
			> 140.0	1	38.00	1.50	57	-	-	-	-	-	-	-
			0 - 140	1	2.00	-	-	-	-	-	-	1	2	-
			> 140.0	1	38.00	-	-	-	-	-	-	1	38	-
			0.0 - 30	1	-	1	-	-	-	-	-	-	-	-
			0.0 - 30	1	-	-	-	-	-	-	-	1	-	-
			30.01 - 60	1	-	1	-	-	-	-	-	-	-	-
			30.01 - 60	1	-	-	-	-	-	-	-	1	-	-
			0 - 140	1	2.00	-	-	-	1	1	-	-	-	-
			> 140.0	1	38.00	-	-	-	1	2	-	-	-	-
			0.0 - 30	1	-	-	-	-	1	-	-	-	-	-
			30.01 - 60	1	-	-	-	-	1	-	-	-	-	-
B (BUILDING)	Residential	Low income group and EWS Housing	0 - 140	1	112.00	1.00	112	-	-	-	-	-	-	-
			> 140.0	1	-	1	-	-	-	-	-	-	-	-
			0 - 140	1	112.00	-	-	-	-	-	-	1	112	-
			> 140.0	1	-	-	-	-	-	-	-	1	-	-
			0.0 - 30	1	-	1	-	-	-	-	-	-	-	-
			0.0 - 30	1	-	-	-	-	-	-	-	1	-	-
			30.01 - 60	1	-	1	-	-	-	-	-	-	-	-
			30.01 - 60	1	-	-	-	-	-	-	-	1	-	-
			0 - 140	1	112.00	-	-	-	1	12	-	-	-	-
			> 140.0	1	-	-	-	-	1	-	-	-	-	-
			0.0 - 30	1	-	-	-	-	1	-	-	-	-	-
			30.01 - 60	1	-	-	-	-	1	-	-	-	-	-
C (BUILDING)	Residential	Low income group and EWS Housing	0 - 140	1	-	1	-	-	-	-	-	-	-	-
			> 140.0	1	-	1	-	-	-	-	-	-	-	-
			0 - 140	1	-	-	-	-	-	-	-	1	-	-
			> 140.0	1	-	-	-	-	-	-	-	1	-	-
			0.0 - 30	1	47.00	0.21	10	-	-	-	-	-	-	-
			0.0 - 30	1	47.00	-	-	-	-	-	-	1	37	-
			30.01 - 60	1	47.00	0.51	24	-	-	-	-	-	-	-
			30.01 - 60	1	47.00	-	-	-	-	-	-	1	23	-
			0 - 140	1	-	-	-	-	1	-	-	-	-	-
			> 140.0	1	-	-	-	-	1	-	-	-	-	-
			0.0 - 30	1	47.00	-	-	-	1	1	-	-	-	-
			30.01 - 60	1	47.00	-	-	-	1	3	-	-	-	-
D (BUILDING)	Assembly	Club	> 0	10	10.00	1	1	-	-	-	-	-	-	-
			> 0	10	10.00	-	-	-	-	-	-	1	3	-
	Total :		-	-	-	-	206	231	-	19	19	-	215	250

Parking Check (Table 7b)

Vehicle Type	Reqd.		Prop.	
	No.	Area	No.	Area
Car	-	-	231	2887.50
Total Car	206	2575.00	231	2887.50
Visitor's Car Parking	-	-	19	237.50
Total Visitor Parking	19	237.50	19	237.50
TwoWheeler	-	-	250	500.00
Total TwoWheeler	215	430.00	250	500.00
Other Parking	-	-	-	3858.08
Total	3242.50		7983.08	

LTP NAME AND SIGNATURE	STRUCTURAL ENG'S NAME AND SIGNATURE	BUILDER NAME AND SIGNATURE	DIGITAL SIGNATURE
MANOJ KUMAR RMC/ART/0055/15-16			

Name : ARUN K[illegible]MAR
Designation : Townplanner
Organization :
GOVERNMENT OF

This is system generated MAP. No need to Physically Signed.

ISO_full_bleed_4A0_(1682.00_x_2378.00_MM)

Project Title :BUILDING

DATE	20-10-2023
SHEET NO.	2
-	

Proposal Basic Information

Proposal File No.	RMC/AH/0423/W05/2022
Owner Name	UGNA Buildwell Pvt. Ltd. through Director Mr. Ajit Kumar
Khata No	117,49,03
Plot No	2381, 2386, 2387, 2388, 2389, 2413
Village Name	BADAGAAI
Use	Residential
SubUse	Low income group and EWS Housing

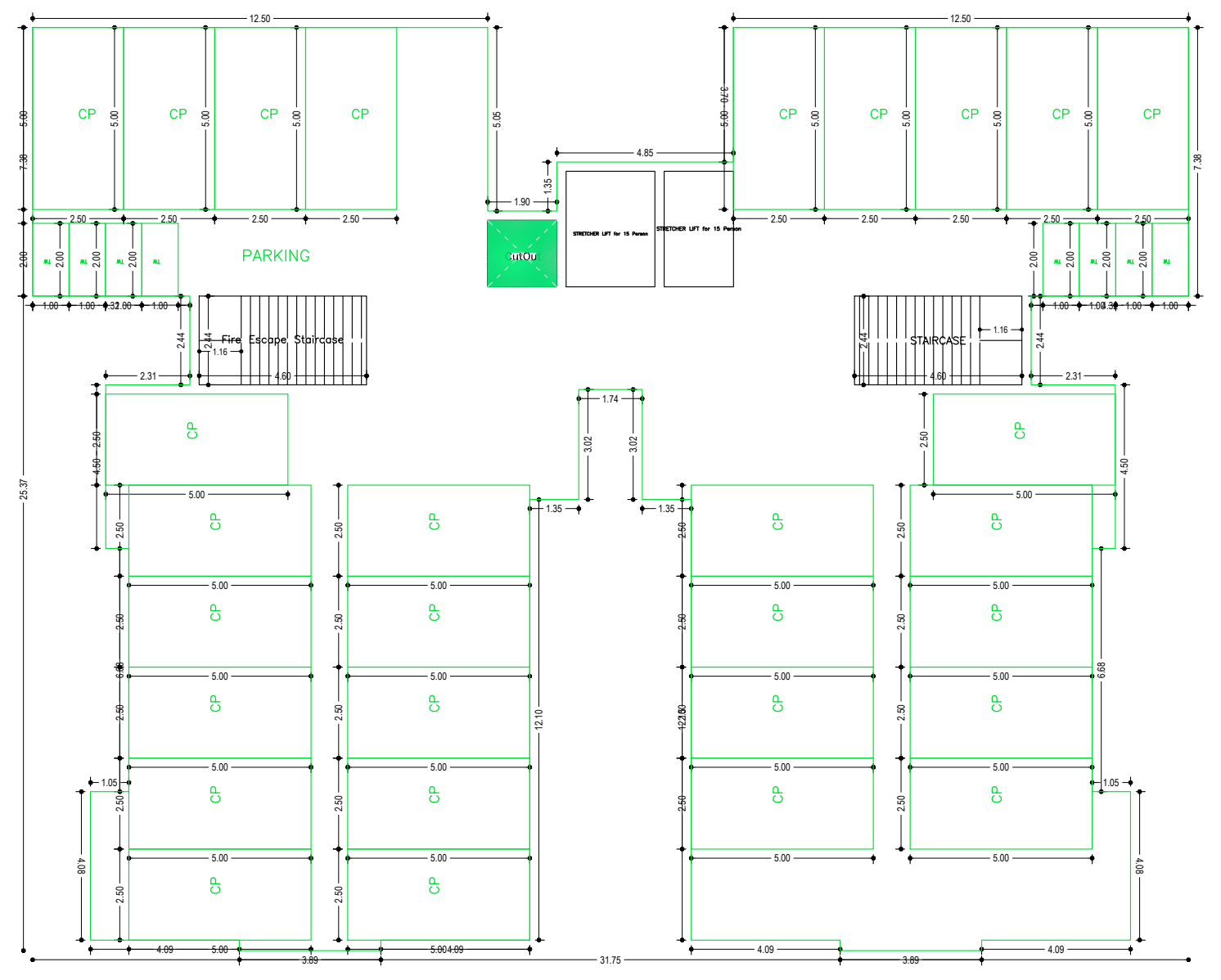

GROUND AND PARKING FLOOR PLAN
(SCALE 1:100)

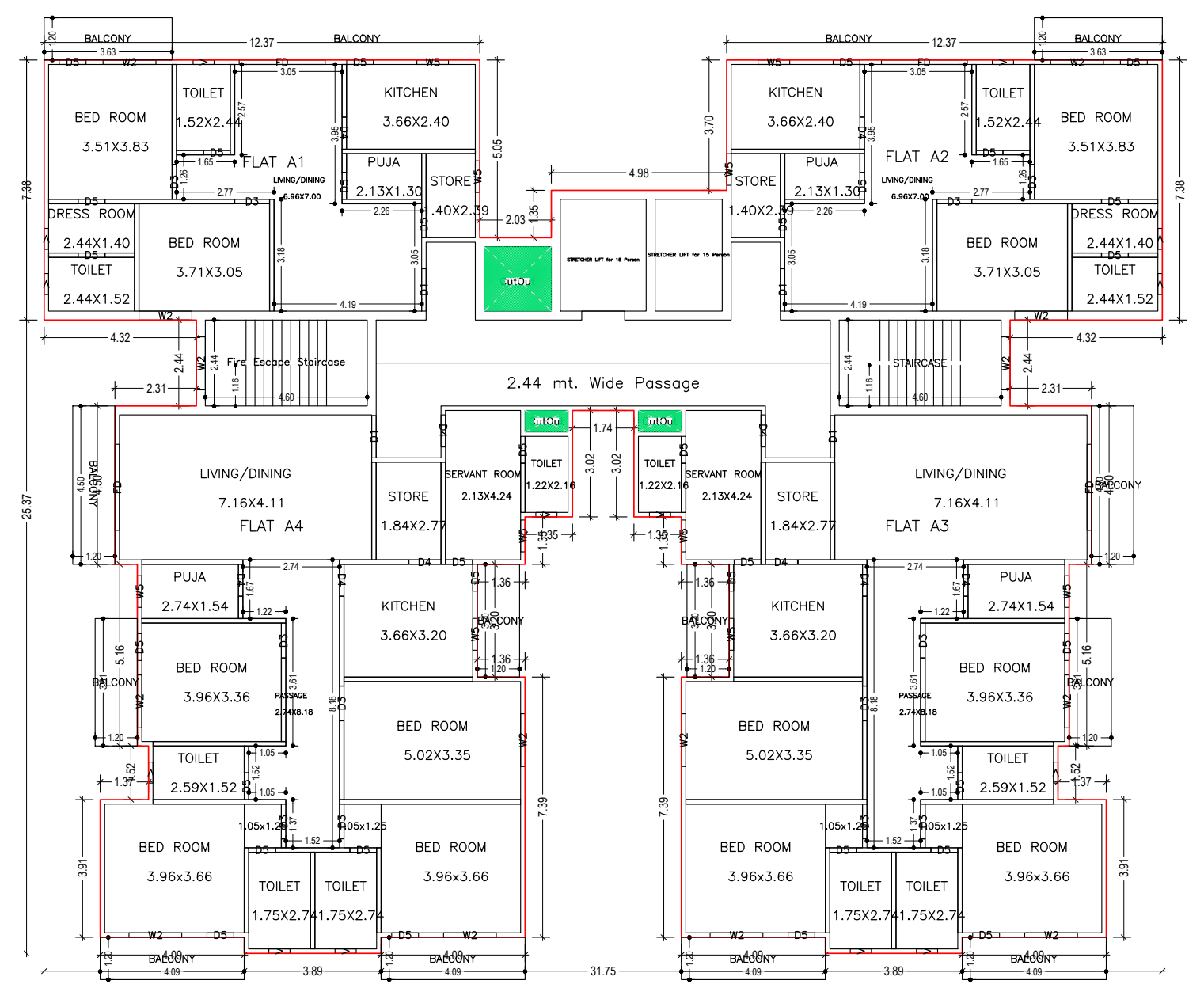
2.44 mt. Wide Passage
FLAT A1
FLAT A2
FLAT A3
FLAT A4
BED ROOM
TOILET
KITCHEN
LIVING/DINING
STORE
PUJA
BALCONY

FIRST FLOOR PLAN
(Proposed)
(SCALE 1:100)

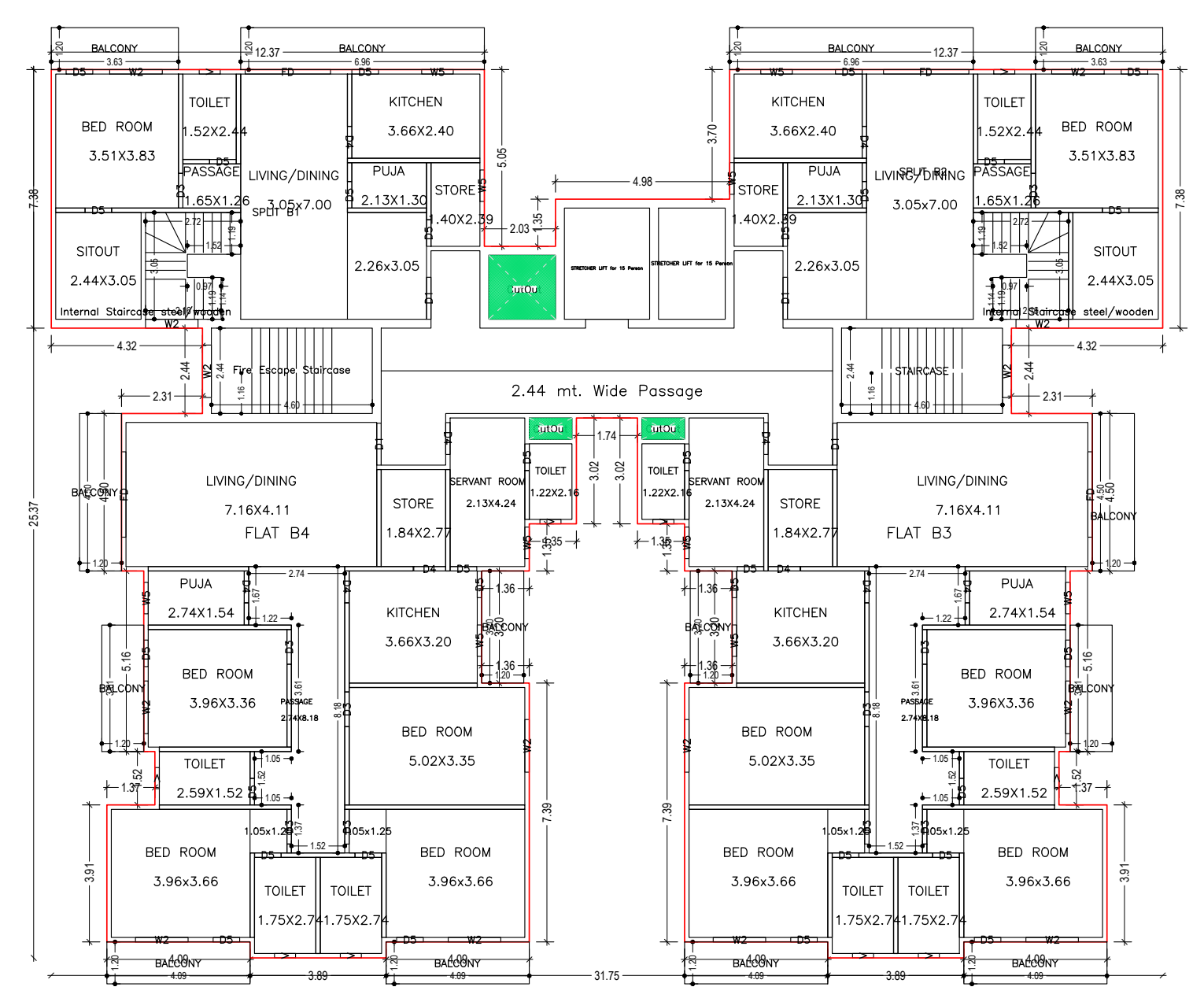
2.44 mt. Wide Passage
FLAT B4
FLAT B3
BED ROOM
TOILET
KITCHEN
LIVING/DINING
SITOUT
STORE
PUJA

TYPICAL – 2, 4, 6, 8, 10, 12 FLOOR PLAN
(Proposed)
(SCALE 1:100)

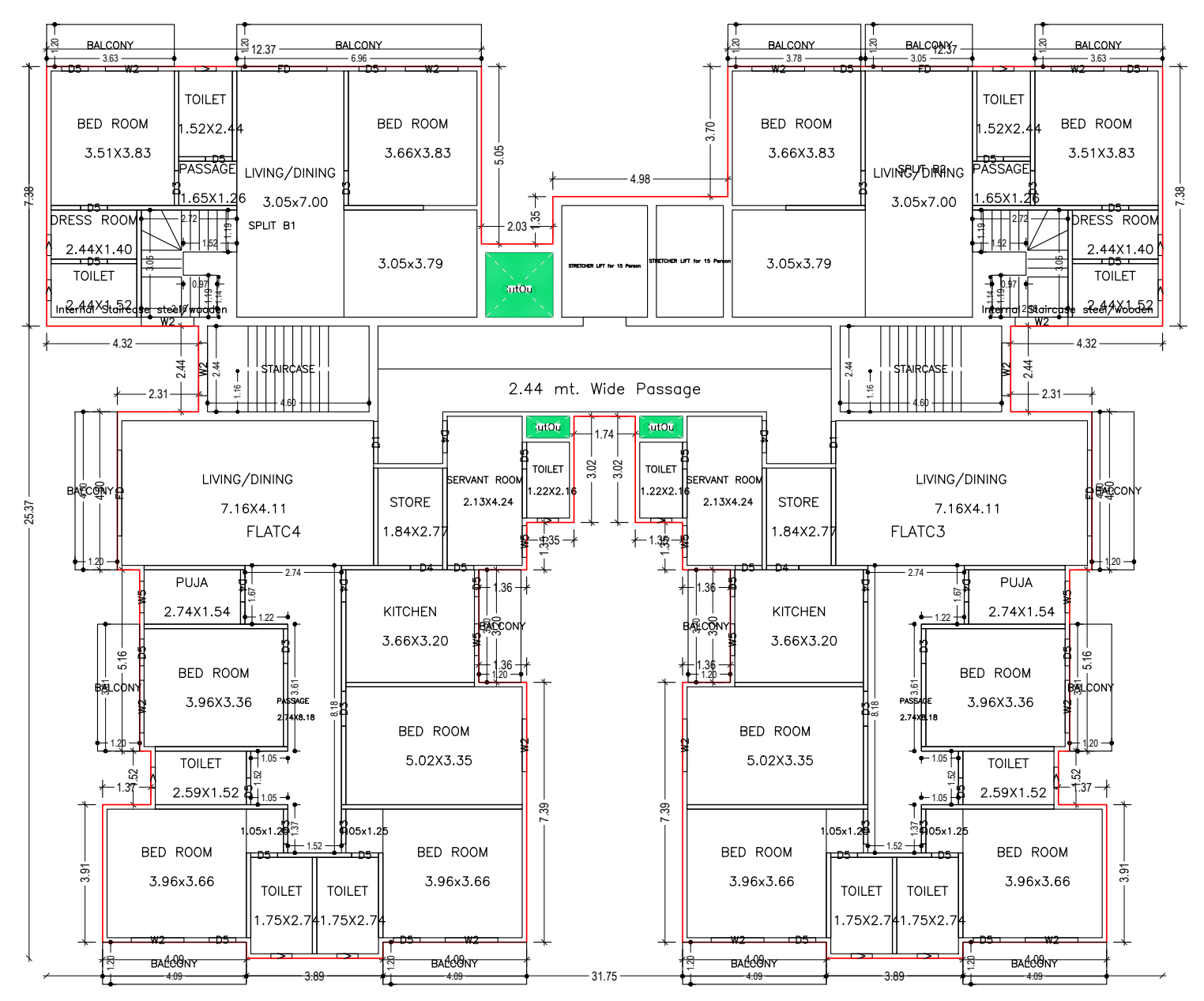
2.44 mt. Wide Passage
FLATC4
FLATC3
BED ROOM
TOILET
KITCHEN
LIVING/DINING
DRESS ROOM
STORE
PUJA

TYPICAL – 3, 5, 7, 9, 11, 13 FLOOR PLAN
(Proposed)
(SCALE 1:100)

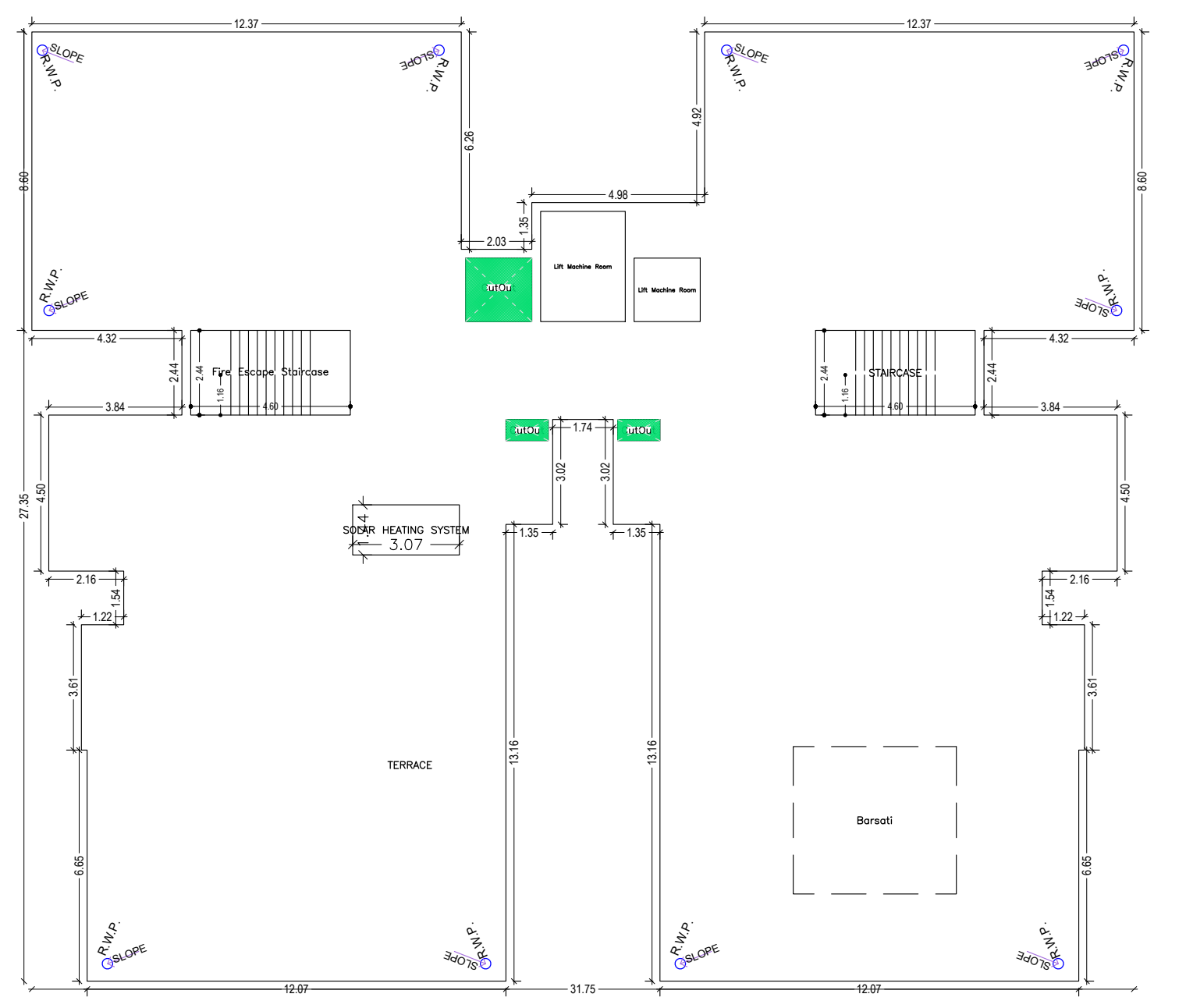

TERRACE FLOOR PLAN
(SCALE 1:100)

Building :A (BUILDING)

Floor Name	Gross Builtup Area	Deductions From Gross BUA(Area in Sq.mt.)	Total Built Up Area (Sq.mt.)	Deductions (Area in Sq.mt.)				Proposed FAR Area (Sq.mt.)	Add Area In FAR (Sq.mt.)	Total FAR Area (Sq.mt.)	Total Consumed Additional FAR Area (Sq.mt.)	Tnmt (No.)
		Cutout		StairCase	Lift	Balcony	Parking	Resi.	Stair			
Ground And Parking Floor	624.38	3.48	620.90	11.21	0.00	0.00	584.69	0.00	11.21	25.00	25.00	00
First Floor	666.31	4.97	661.34	11.21	13.79	55.46	0.00	580.88	0.00	580.88	580.88	04
Second Floor	683.01	4.97	678.04	11.21	13.79	72.16	0.00	580.88	0.00	580.88	580.88	04
Third Floor	682.85	4.97	677.88	0.00	13.79	72.00	0.00	592.09	0.00	592.09	592.09	02
Fourth Floor	683.01	4.97	678.04	11.21	13.79	72.16	0.00	580.88	0.00	580.88	580.88	04
Fifth Floor	682.85	4.97	677.88	0.00	13.79	72.00	0.00	592.09	0.00	592.09	592.09	02
Sixth Floor	683.01	4.97	678.04	11.21	13.79	72.16	0.00	580.88	0.00	580.88	580.88	04
Seventh Floor	682.85	4.97	677.88	0.00	13.79	72.00	0.00	592.09	0.00	592.09	592.09	02
Eighth Floor	683.01	4.97	678.04	11.21	13.79	72.16	0.00	580.88	0.00	580.88	580.88	04
Ninth Floor	682.85	4.97	677.88	0.00	13.79	72.00	0.00	592.09	0.00	592.09	592.09	02
Tenth Floor	683.01	4.97	678.04	11.21	13.79	72.16	0.00	580.88	0.00	580.88	580.88	04
Eleventh Floor	682.85	4.97	677.88	0.00	13.79	72.00	0.00	592.09	0.00	592.09	592.09	02
Twelfth Floor	683.01	4.97	678.04	11.21	13.79	72.16	0.00	580.88	0.00	580.88	580.88	04
Thirteenth Floor	682.85	4.97	677.88	0.00	13.79	72.00	0.00	592.09	0.00	592.09	592.09	02
Terrace Floor	0.00	0.00	0.00	0.00	0.00	0.00	0.00	0.00	0.00	0.00	0.00	00
Total :	9485.85	68.09	9417.76	89.68	179.27	920.42	584.69	7618.70	11.21	7643.70	7643.70	40
Total Number of Same Buildings :	1											
Total :	9485.85	68.09	9417.76	89.68	179.27	920.42	584.69	7618.70	11.21	7643.70	7643.70	40

SCHEDULE OF DOOR:

BUILDING NAME	NAME	LENGTH	HEIGHT	NOS
A (BUILDING)	D5	0.76	2.10	380
A (BUILDING)	D4	0.91	2.10	118
A (BUILDING)	D3	0.99	2.10	144
A (BUILDING)	D1	1.20	2.10	40
A (BUILDING)	FD	2.44	2.10	52

SCHEDULE OF WINDOW/VENTILATION:

BUILDING NAME	NAME	LENGTH	HEIGHT	NOS
A (BUILDING)	V	0.60	1.20	158
A (BUILDING)	W5	0.90	1.20	106
A (BUILDING)	W2	1.50	1.20	194

Balcony Calculations Table

FLOOR	SIZE	AREA	TOTAL AREA
FIRST FLOOR PLAN	1.20 X 3.63 X 2 X 1	8.72	55.44
	1.20 X 4.50 X 2 X 1	10.78	
	1.20 X 3.61 X 2 X 1	8.66	
	1.20 X 4.09 X 4 X 1	19.60	
	1.20 X 3.20 X 2 X 1	7.68	
TYPICAL - 2, 4, 6, 8, 10, 12 FLOOR PLAN	1.20 X 3.63 X 2 X 6	52.32	432.84
	1.20 X 6.96 X 2 X 6	100.20	
	1.20 X 4.50 X 2 X 6	64.68	
	1.20 X 3.61 X 2 X 6	51.96	
	1.20 X 4.09 X 4 X 6	117.60	
	1.20 X 3.20 X 2 X 6	46.08	
TYPICAL - 3, 5, 7, 9, 11, 13 FLOOR PLAN	1.20 X 3.63 X 2 X 6	52.32	431.94
	1.20 X 6.96 X 1 X 6	50.10	
	1.20 X 4.50 X 2 X 6	64.68	
	1.20 X 3.61 X 2 X 6	51.96	
	1.20 X 4.09 X 4 X 6	117.60	
	1.20 X 3.20 X 2 X 6	46.08	
	1.20 X 3.79 X 1 X 6	27.24	
	1.20 X 3.05 X 1 X 6	21.96	
Total	-	-	920.22

UnitBUA Table for Building :A (BUILDING)

FLOOR	Name	UnitBUA Type	UnitBUA Area	Carpet Area	No. of Rooms	No. of Tenement
FIRST FLOOR PLAN	FLAT A1	FLAT	81.65	78.06	9	4
	FLAT A2	FLAT	81.65	78.06	9	
	FLAT A3	FLAT	161.42	154.97	14	
	FLAT A4	FLAT	161.42	154.97	14	
TYPICAL - 2, 4, 6, 8, 10, 12 FLOOR PLAN	FLAT B3	FLAT	161.42	154.97	14	24
	FLAT B4	FLAT	161.42	154.97	14	
	SPLIT B1	FLAT	590.59	572.37	8	
	SPLIT B2	FLAT	590.60	571.98	8	
TYPICAL - 3, 5, 7, 9, 11, 13 FLOOR PLAN	FLATC3	FLAT	161.42	154.97	14	12
	FLATC4	FLAT	161.42	154.97	14	
	SPLIT B1	FLAT	0.00	0.00	7	
	SPLIT B2	FLAT	0.00	0.00	7	
Total:	-	-	11447.47	11051.55	562	40

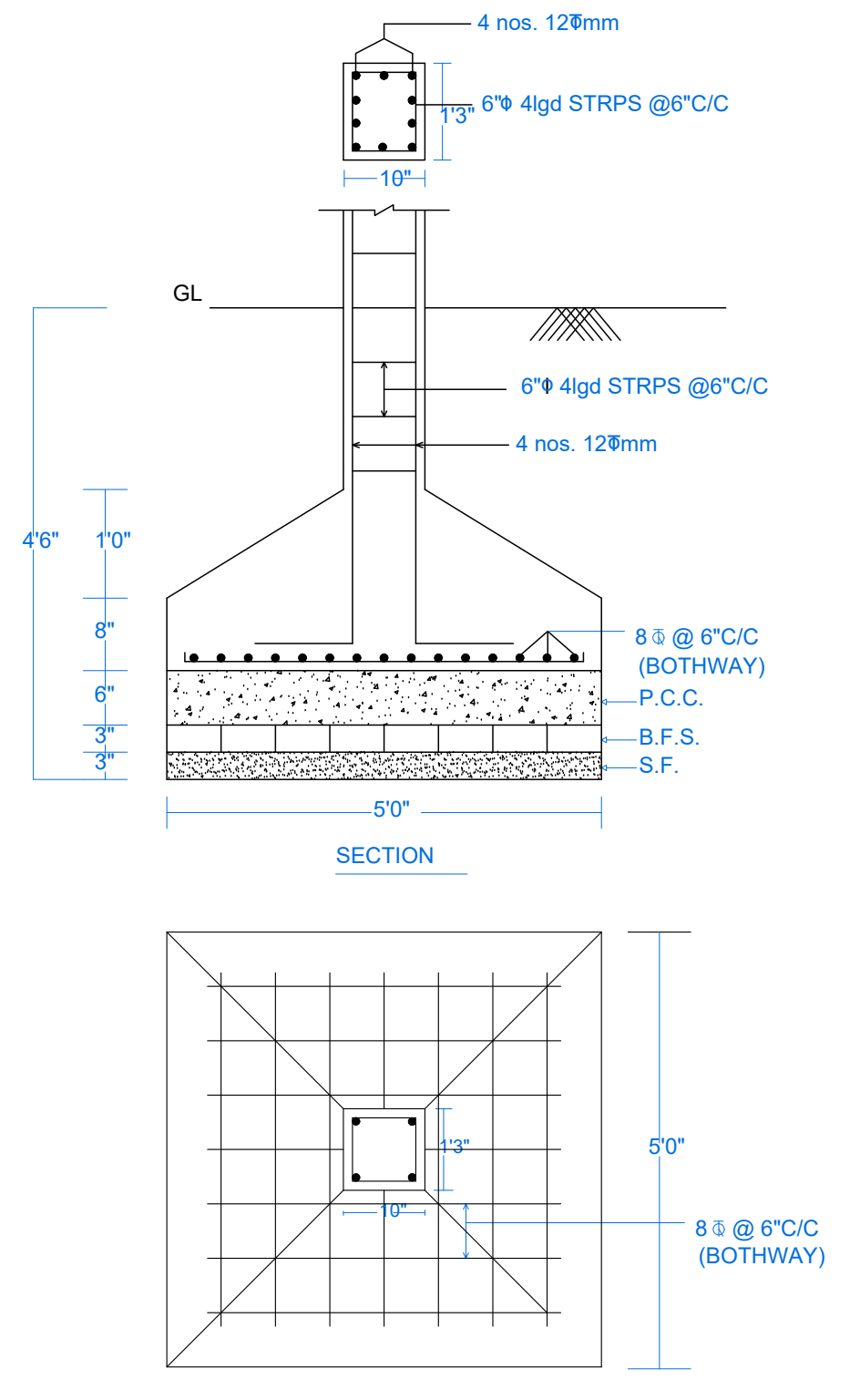
4 nos. 12Φmm
6"Φ 4lgd STRPS @6"C/C
1'3"
10"
GL
6"Φ 4lgd STRPS @6"C/C
4 nos. 12Φmm
4'6"
1'0"
8"
6"
3"
3"
8 Φ @ 6"C/C
(BOTHWAY)
P.C.C.
B.F.S.
S.F.
5'0"
SECTION
1'3"
10"
5'0"
8 Φ @ 6"C/C
(BOTHWAY)
5'0"

PLAN

DETAIL OF COLUMNS

SCALE:- 1" = 2' - 0"

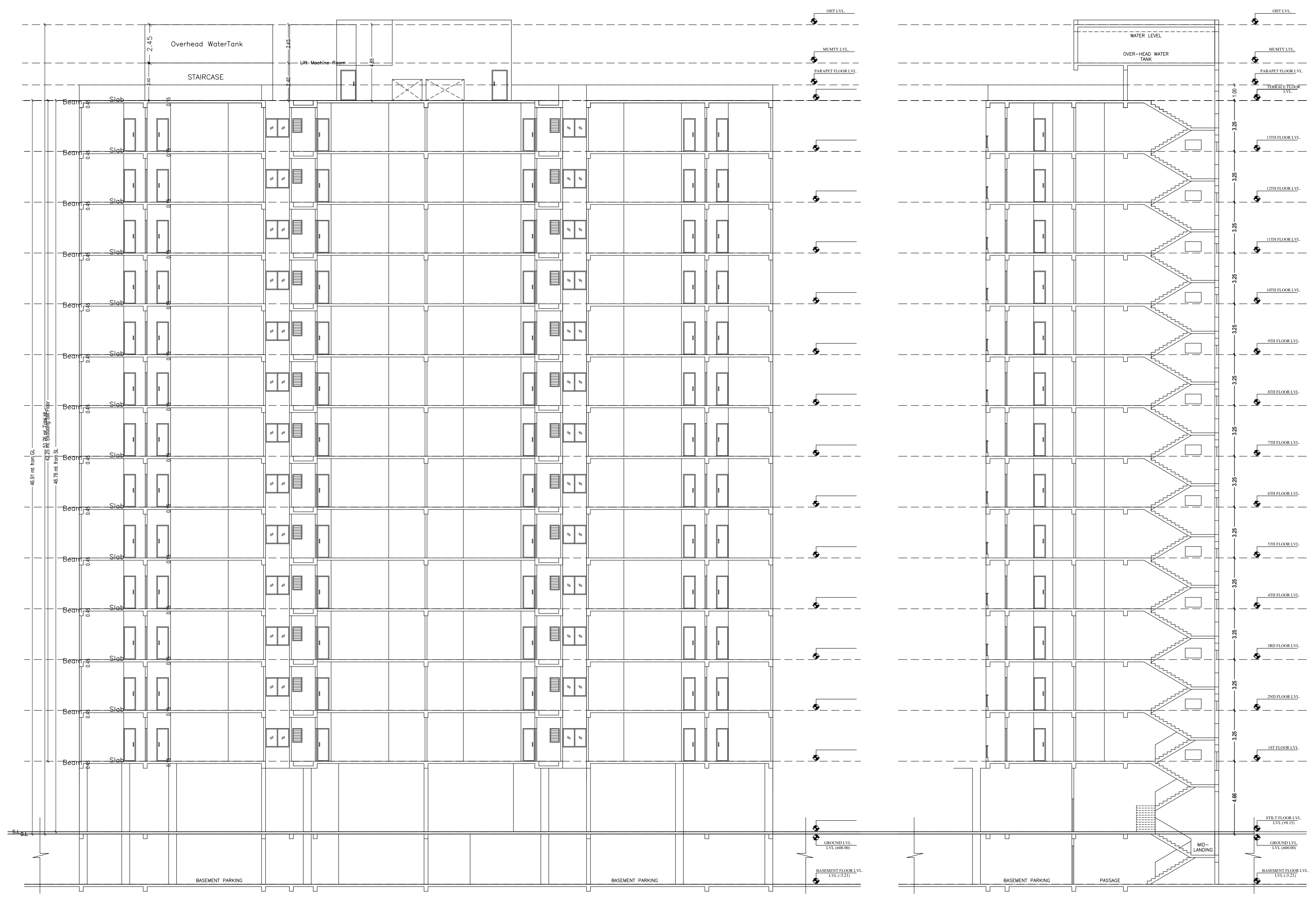
Overhead WaterTank
STAIRCASE
BASEMENT PARKING
PASSAGE
WATER LEVEL
OVER HEAD WATER TANK

SECTION AA
SCALE - 1:100

SECTION BB
SCALE - 1:100

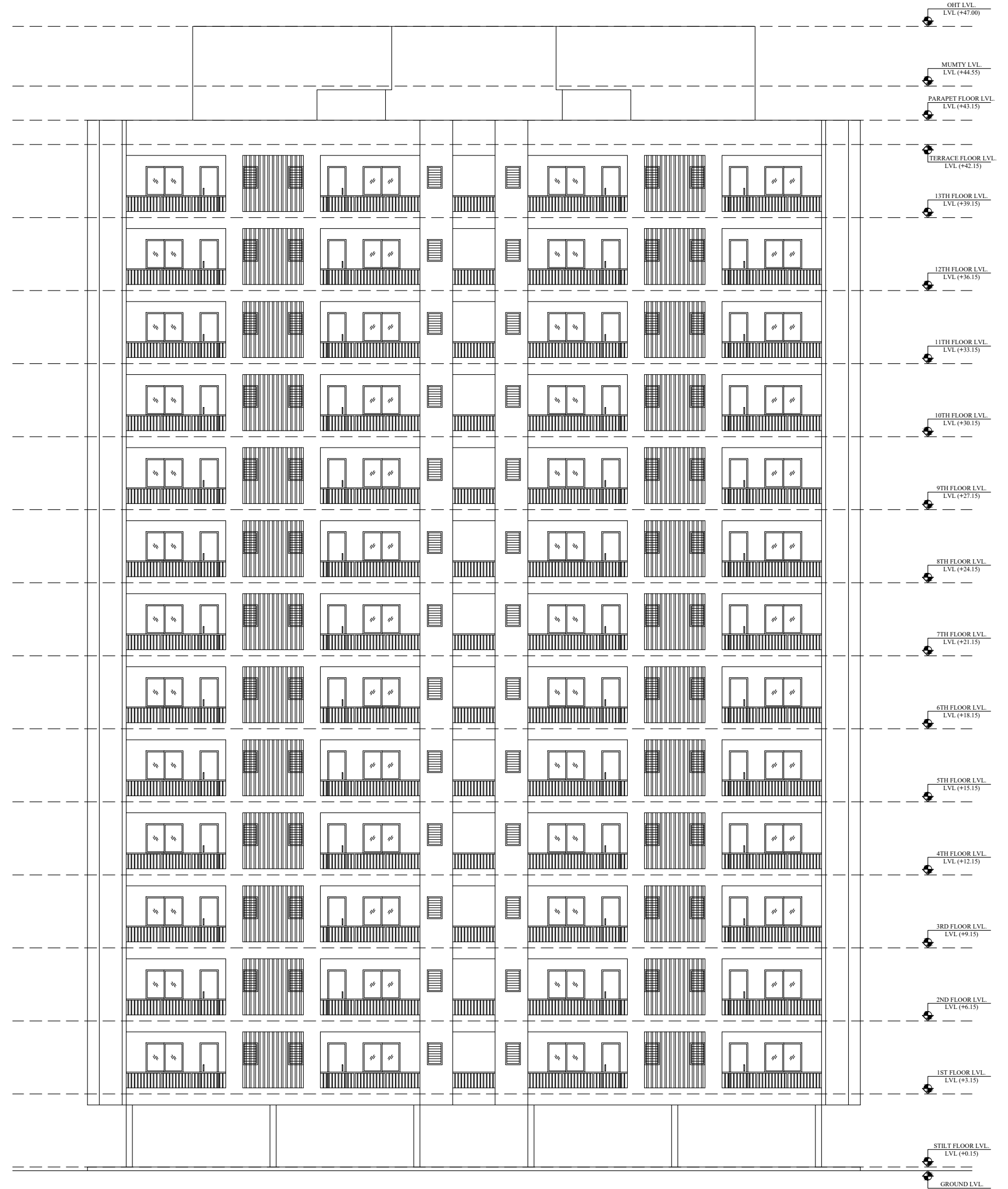

FRONT ELEVATION
SCALE - 1:100

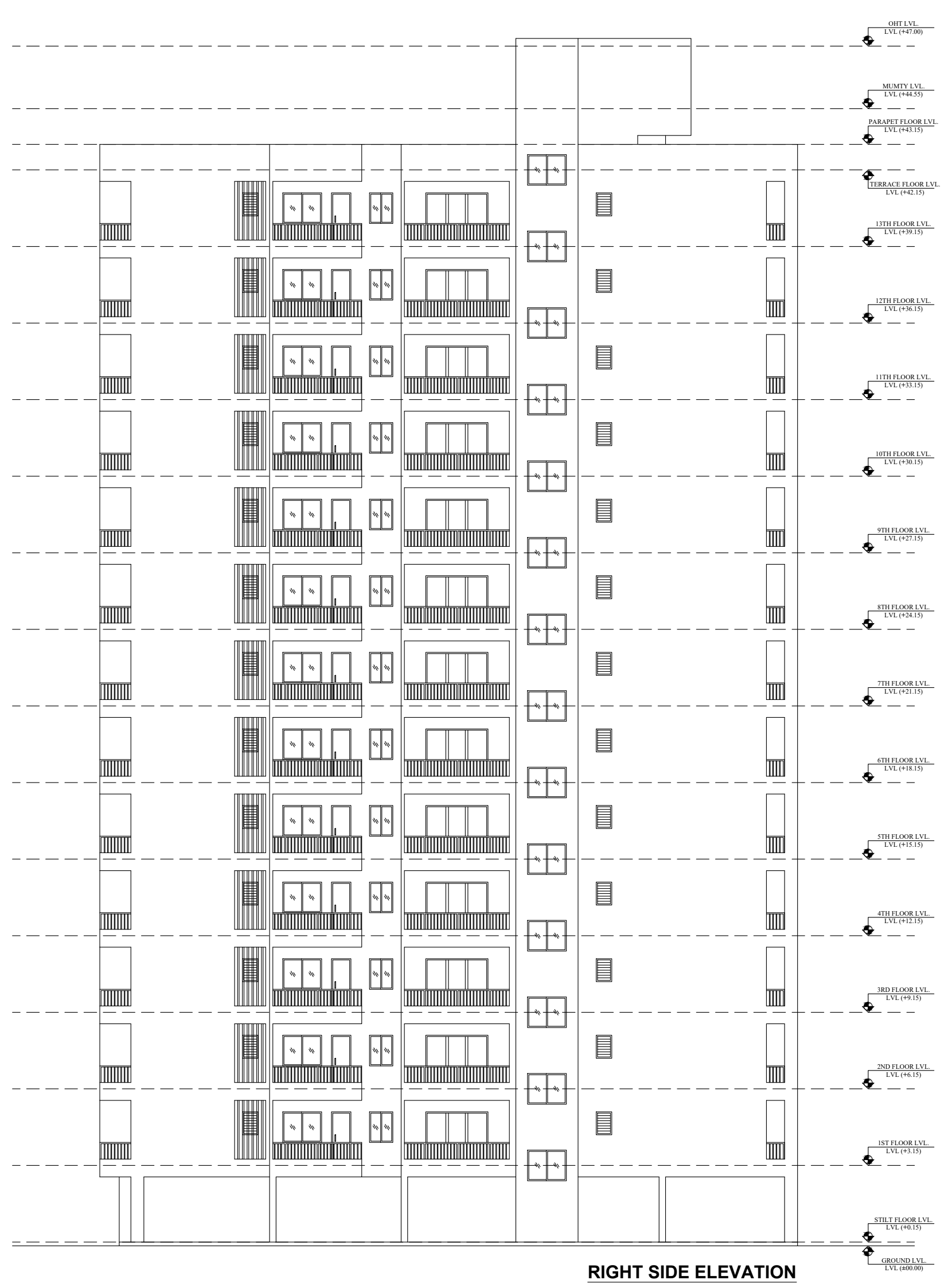

RIGHT SIDE ELEVATION
SCALE - 1:100

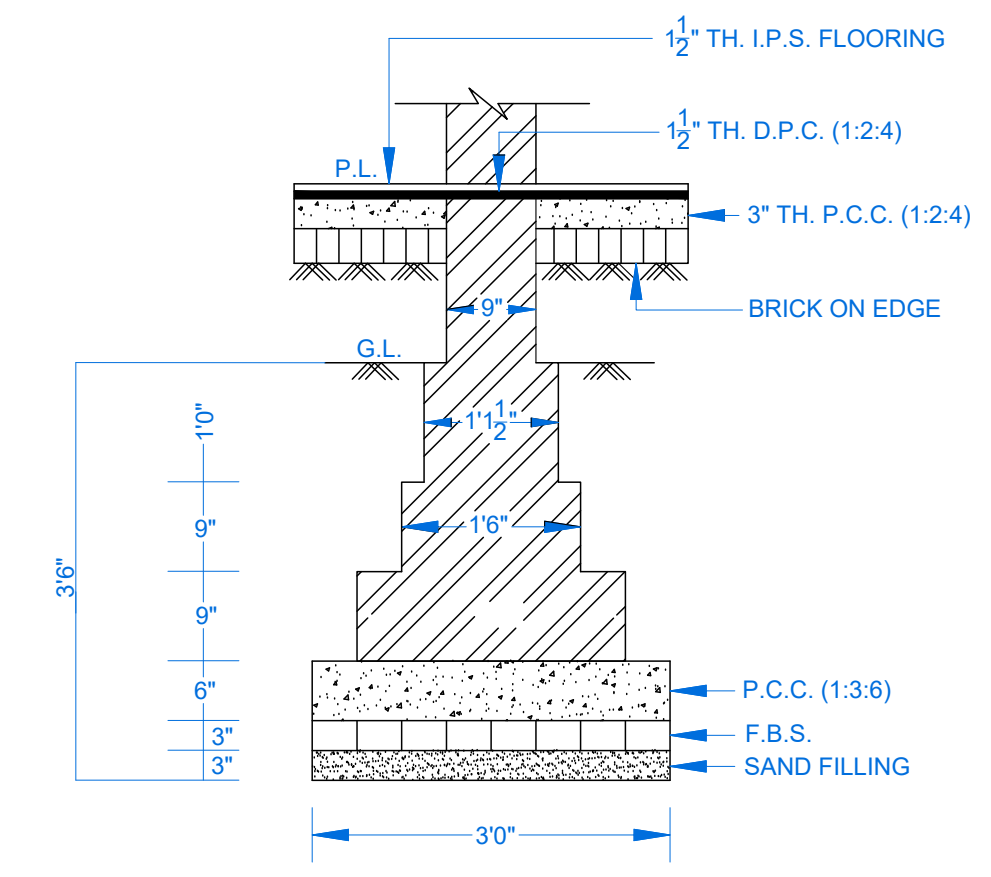
1½" TH. I.P.S. FLOORING
1½" TH. D.P.C. (1:2:4)
P.L.
3" TH. P.C.C. (1:2:4)
BRICK ON EDGE
9"
G.L.
1'1½"
1'6"
3'6"
1'0"
9"
9"
6"
3"
3"
P.C.C. (1:3:6)
F.B.S.
SAND FILLING
3'0"

-:DETAIL OF BRICK FOUNDATION:-

SCALE:- 1" = 2' - 0"

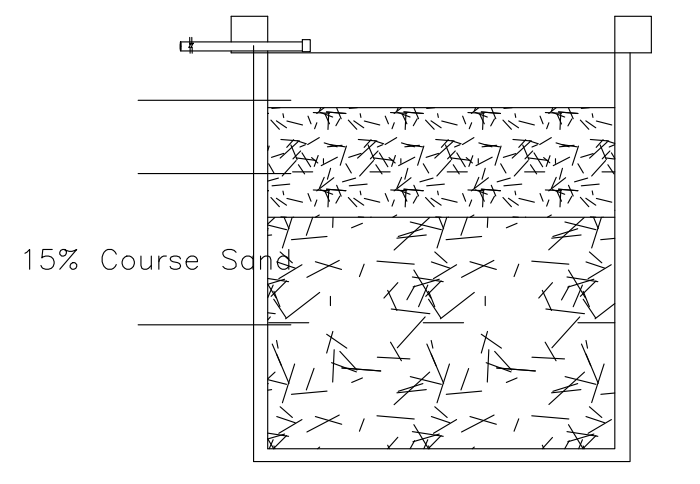
15% Course Sand

SECTION AT Y-Y

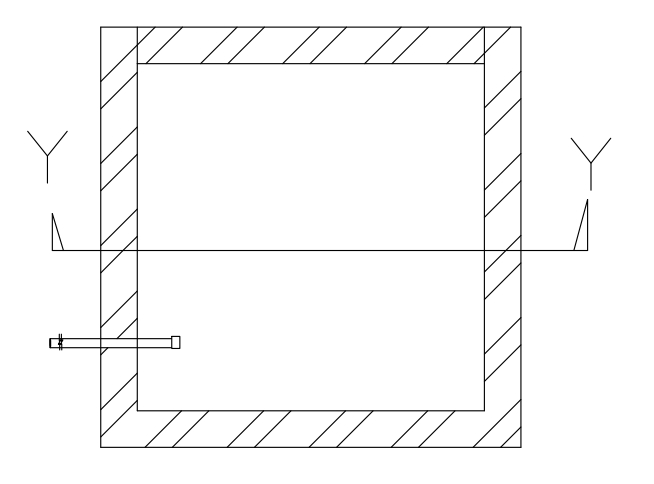

PLAN OF RECHARGE WELL

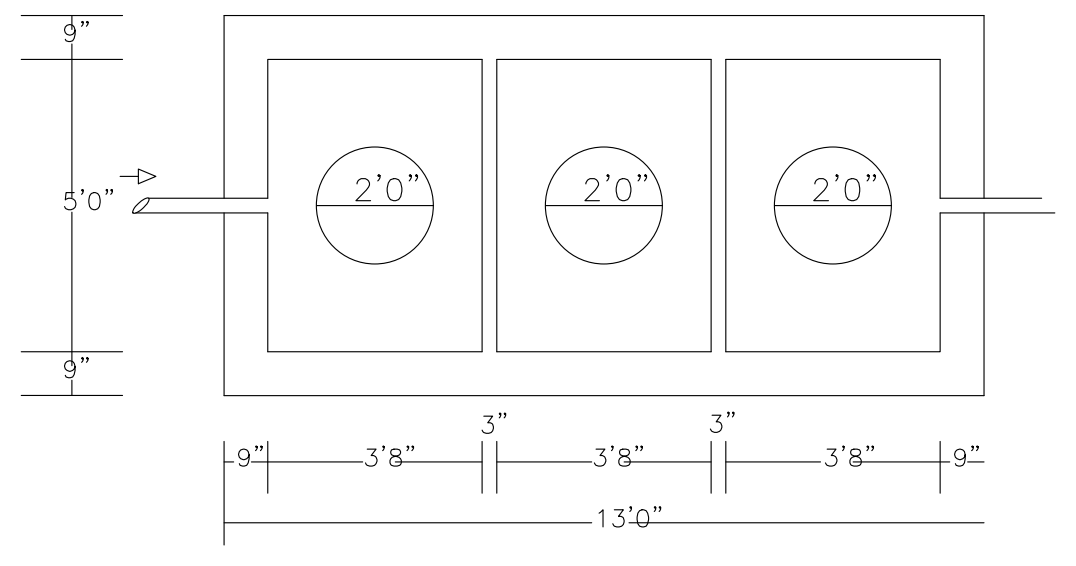
2'0"
2'0"
2'0"
5'0"
9"
3'8"
3"
3'8"
3"
3'8"
9"
13'0"

PLAN OF SEPTIC TANK
SCALE:- 1" = 4' - 0"

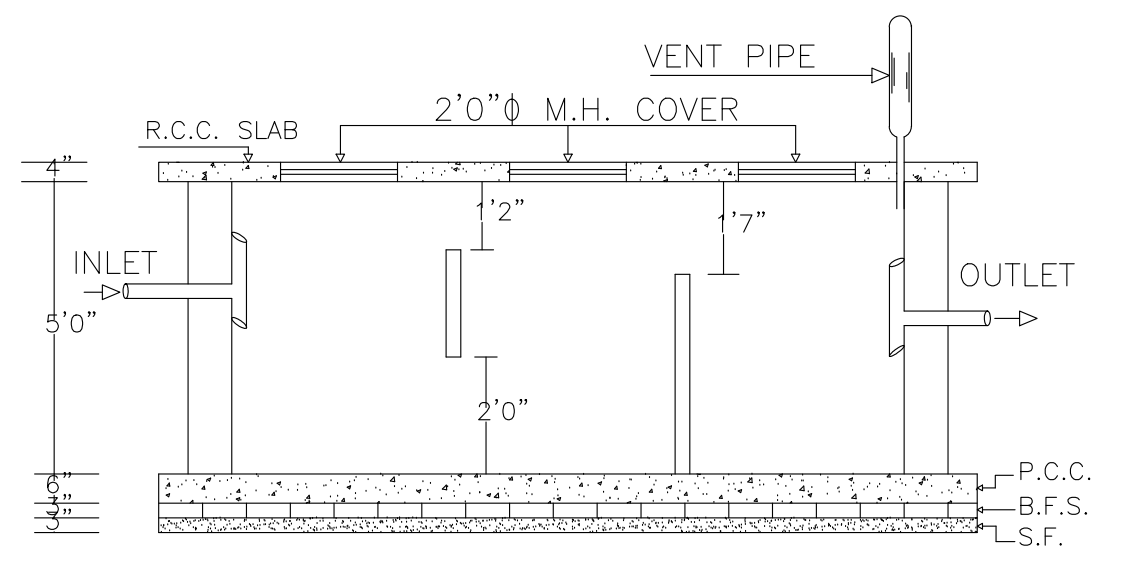
VENT PIPE
2'0"Φ M.H. COVER
R.C.C. SLAB
INLET
OUTLET
5'0"
2'0"
P.C.C.
B.F.S.
S.F.

SECTION OF SEPTIC TANK

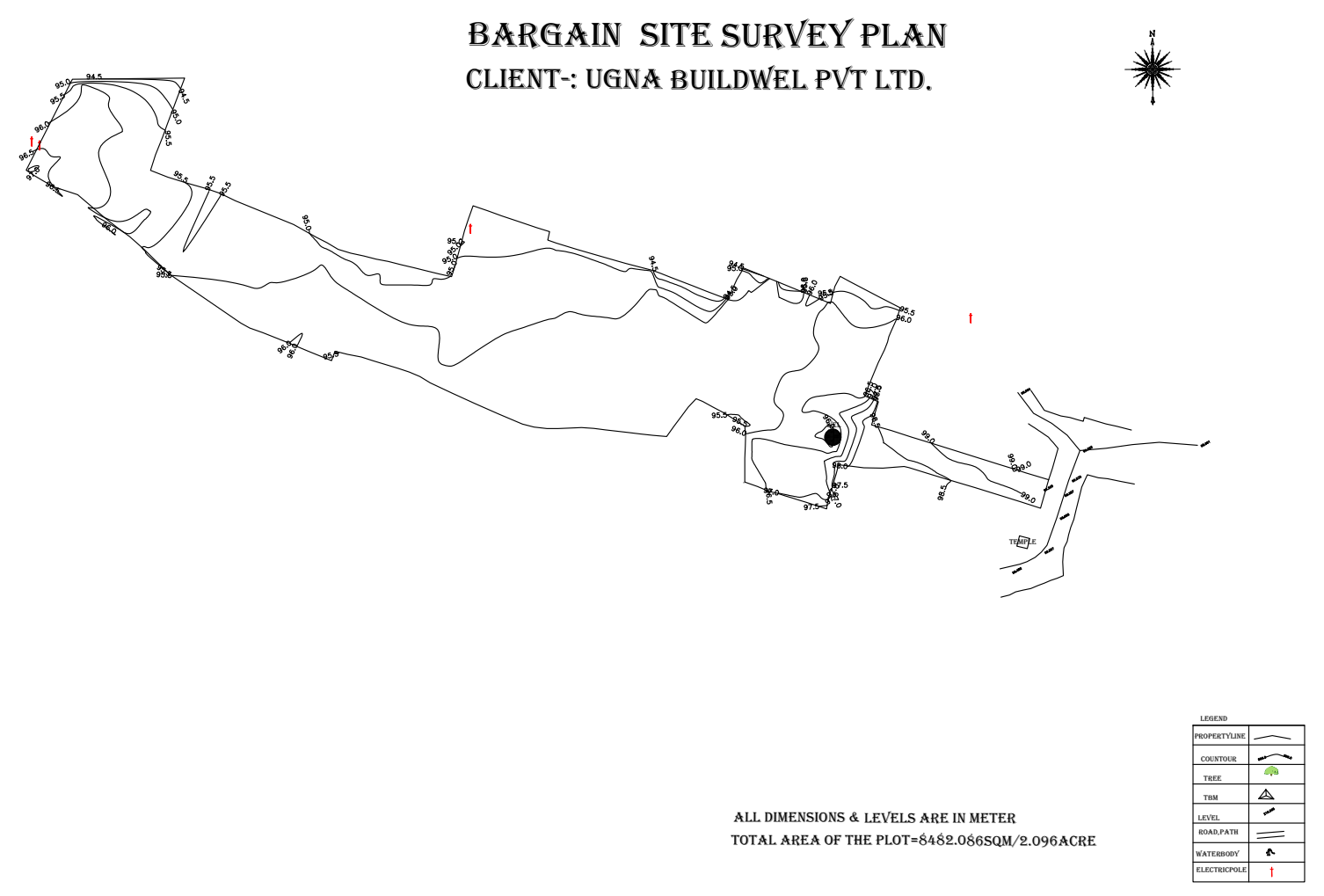
TEMPLE
LEGEND
PROPERTYLINE
COUNTOUR
TREE
TBM
LEVEL
ROAD,PATH
WATERBODY
ELECTRICPOLE

BARGAIN SITE SURVEY PLAN
CLIENT-: UGNA BUILDWEL PVT LTD.

ALL DIMENSIONS & LEVELS ARE IN METER
TOTAL AREA OF THE PLOT=8482.086SQM/2.096ACRE

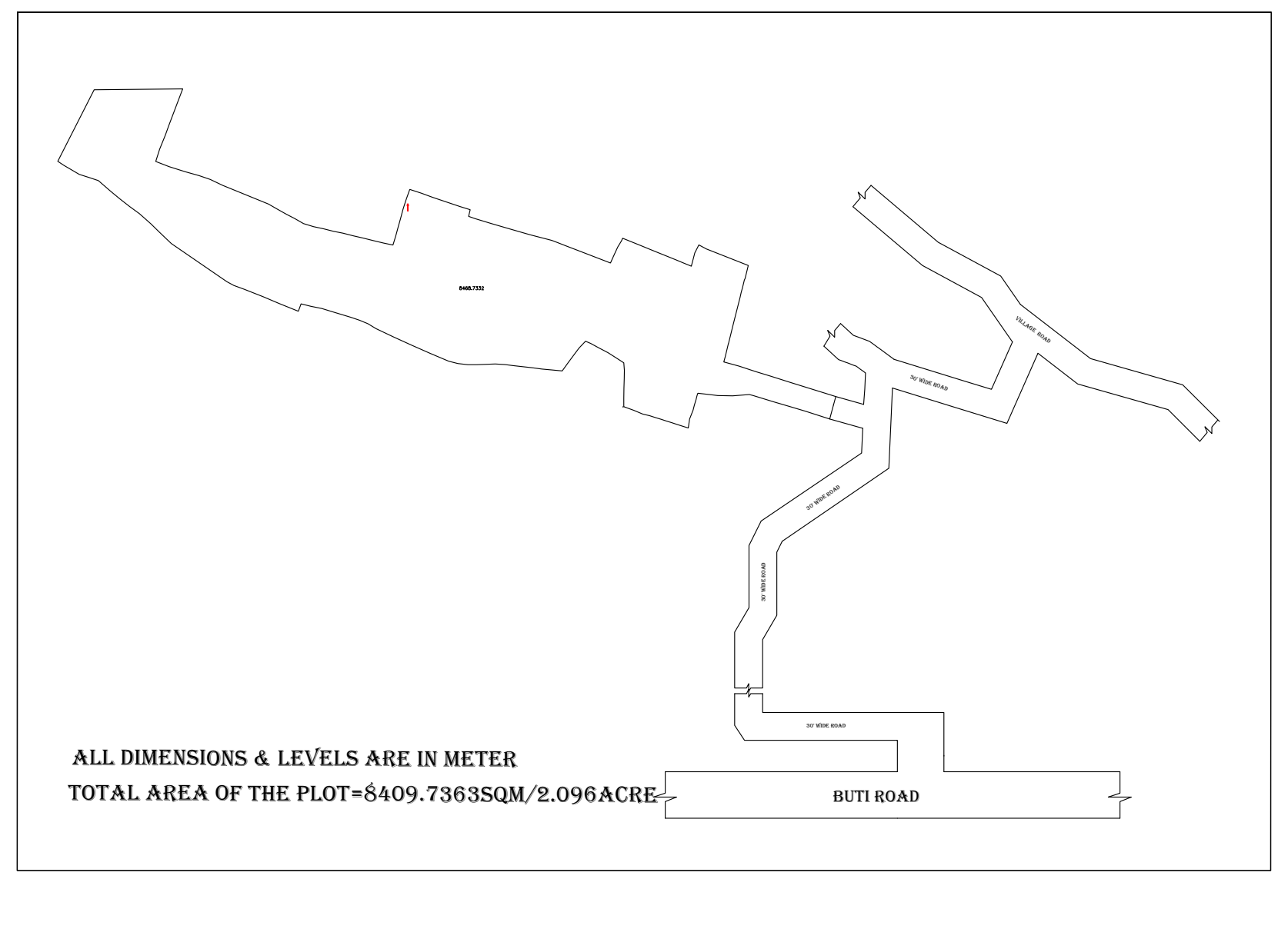
30' WIDE ROAD
30' WIDE ROAD
30' WIDE ROAD
BUTI ROAD

ALL DIMENSIONS & LEVELS ARE IN METER
TOTAL AREA OF THE PLOT=8409.7363SQM/2.096ACRE

CERTIFICATE FOR STRUCTURE SAFETY

THIS IS CERTIFY THAT THE STRUCTURAL DESIGN OF THE BUILDING WILL BE AS PER I.S–1983–1984 & I.S.4326–1993 TO MAKE SAME EARTH QUAKE

LTP NAME AND SIGNATURE	STRUCTURAL ENG'S NAME AND SIGNATURE	BUILDER NAME AND SIGNATURE	DIGITAL SIGNATURE
MANOJ KUMAR RMC/ART/0055/15-16			

Name : ARUN KUMAR
Designation : Townplanner
Organization :
GOVERNMENT OF

ISO_full_bleed_4A0_(1682.00_x_2378.00_MM)

This is system generated MAP. No need to Physically Signed.

Project Title :BUILDING

DATE	20-10-2023
SHEET NO.	3
-	

Proposal Basic Information

Proposal File No.	RMC/AH/0423/W05/2022
Owner Name	UGNA Buildwell Pvt. Ltd. through Director Mr. Ajit Kumar
Khata No	117,49,03
Plot No	2381, 2386, 2387, 2388, 2389, 2413
Village Name	BADAGAAI
Use	Residential
SubUse	Low income group and EWS Housing

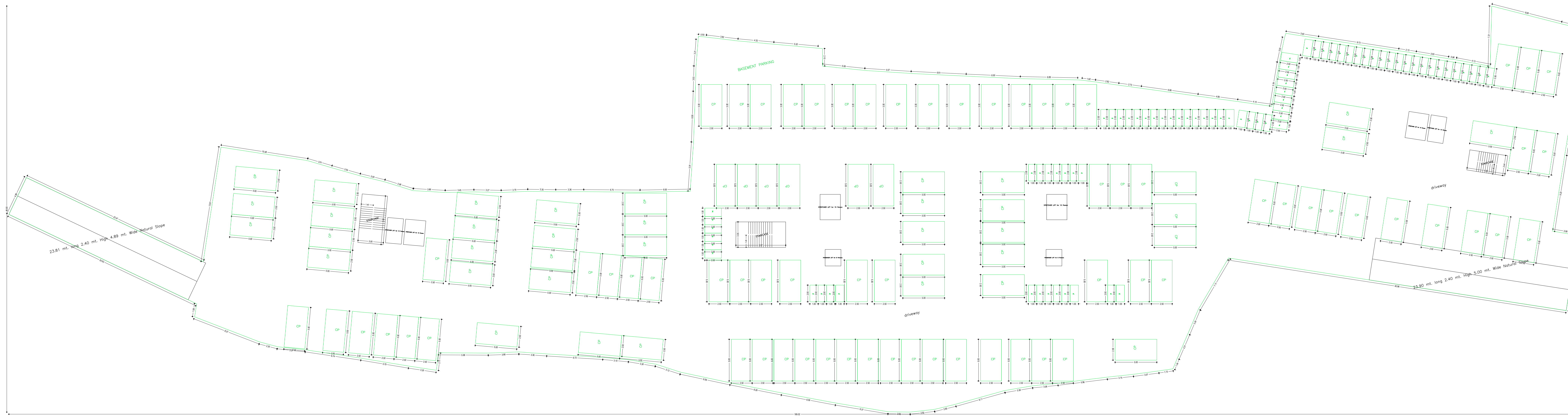
BASEMENT PARKING
driveway
CP
23.81 mt. long 2.40 mt. high 4.89 mt. Wide Natural Slope
23.90 mt. long 2.40 mt. high 5.00 mt. Wide Natural Slope

BASEMENT FLOOR PLAN
(SCALE 1:100)

Building :B (BUILDING)

Floor Name	Gross Builtup Area	Deductions From Gross BUA(Area in Sq.mt.)	Total Built Up Area (Sq.mt.)	Deductions (Area in Sq.mt.)				Proposed FAR Area (Sq.mt.)	Add Area In FAR (Sq.mt.)	Total FAR Area (Sq.mt.)	Total Consumed Additional FAR Area (Sq.mt.)	Tnmt (No.)
		Cutout		StairCase	Lift	Balcony	Parking	Resi.	Stair			
Basement Floor	4885.61	0.00	4885.61	0.00	49.41	0.00	4551.12	0.00	47.20	47.20	47.20	00
Ground And Parking Floor	1192.13	7.25	1184.88	18.20	0.00	0.00	1126.10	0.00	18.19	40.58	40.58	00
First Floor	1278.84	23.18	1255.66	19.21	22.39	119.72	0.00	1094.34	0.00	1094.34	1094.34	08
Second Floor	1280.15	24.11	1256.04	19.21	22.39	119.72	0.00	1094.72	0.00	1094.72	1094.72	08
Third Floor	1280.15	24.11	1256.04	19.21	22.39	119.72	0.00	1094.72	0.00	1094.72	1094.72	08
Fourth Floor	1280.15	24.11	1256.04	19.21	22.39	119.72	0.00	1094.72	0.00	1094.72	1094.72	08
Fifth Floor	1280.15	24.11	1256.04	19.21	22.39	119.72	0.00	1094.72	0.00	1094.72	1094.72	08
Sixth Floor	1280.15	24.11	1256.04	19.21	22.39	119.72	0.00	1094.72	0.00	1094.72	1094.72	08
Seventh Floor	1280.15	24.11	1256.04	19.21	22.39	119.72	0.00	1094.72	0.00	1094.72	1094.72	08
Eighth Floor	1280.15	24.11	1256.04	19.21	22.39	119.72	0.00	1094.72	0.00	1094.72	1094.72	08
Ninth Floor	1280.15	24.11	1256.04	19.21	22.39	119.72	0.00	1094.72	0.00	1094.72	1094.72	08
Tenth Floor	1280.15	24.11	1256.04	19.21	22.39	119.72	0.00	1094.72	0.00	1094.72	1094.72	08
Eleventh Floor	1280.15	24.11	1256.04	19.21	22.39	119.72	0.00	1094.72	0.00	1094.72	1094.72	08
Twelfth Floor	1280.15	24.11	1256.04	19.21	22.39	119.72	0.00	1094.72	0.00	1094.72	1094.72	08
Thirteenth Floor	1280.15	24.11	1256.04	19.21	22.39	119.72	0.00	1094.72	0.00	1094.72	1094.72	08
Fourteenth Floor	1280.15	24.11	1256.04	19.21	22.39	119.72	0.00	1094.72	0.00	1094.72	1094.72	08
Terrace Floor	0.00	0.00	0.00	0.00	0.00	0.00	0.00	0.00	0.00	0.00	0.00	00
Total :	23998.52	343.86	23654.66	287.14	362.87	1676.08	5677.22	15325.70	65.39	15413.48	15413.48	112
Total Number of Same Buildings :	1											
Total :	23998.52	343.86	23654.66	287.14	362.87	1676.08	5677.22	15325.70	65.39	15413.48	15413.48	112

SCHEDULE OF DOOR:

BUILDING NAME	NAME	LENGTH	HEIGHT	NOS
B (BUILDING)	D5	0.76	2.10	672
B (BUILDING)	D4	0.91	2.10	112
B (BUILDING)	D3	0.99	2.10	336
B (BUILDING)	D1	1.20	2.10	112
B (BUILDING)	FD	2.44	2.10	112

SCHEDULE OF WINDOW/VENTILATION:

BUILDING NAME	NAME	LENGTH	HEIGHT	NOS
B (BUILDING)	V	0.60	1.20	280
B (BUILDING)	W5	0.90	1.20	140
B (BUILDING)	W2	1.50	1.20	532

Balcony Calculations Table

FLOOR	SIZE	AREA	TOTAL AREA
FIRST FLOOR PLAN	1.20 X 4.22 X 4 X 1	20.24	119.74
	1.20 X 3.79 X 2 X 1	9.08	
	1.20 X 3.33 X 4 X 1	15.96	
	1.20 X 2.44 X 6 X 1	17.58	
	1.20 X 3.48 X 2 X 1	8.36	
	1.20 X 3.66 X 2 X 1	8.78	
	1.20 X 2.18 X 2 X 1	5.24	
	1.20 X 3.76 X 4 X 1	18.04	
	1.20 X 3.35 X 2 X 1	8.04	
	1.20 X 3.51 X 2 X 1	8.42	
TYPICAL - 2- 14 FLOOR PLAN	1.20 X 4.22 X 4 X 13	263.12	1556.62
	1.20 X 3.79 X 2 X 13	118.04	
	1.20 X 3.33 X 4 X 13	207.48	
	1.20 X 2.44 X 6 X 13	228.54	
	1.20 X 3.48 X 2 X 13	108.68	
	1.20 X 3.66 X 2 X 13	114.14	
	1.20 X 2.18 X 2 X 13	68.12	
	1.20 X 3.76 X 4 X 13	234.52	
	1.20 X 3.35 X 2 X 13	104.52	
	1.20 X 3.51 X 2 X 13	109.46	
Total	-	-	1676.36

UnitBUA Table for Building :B (BUILDING)

FLOOR	Name	UnitBUA Type	UnitBUA Area	Carpet Area	No. of Rooms	No. of Tenement
FIRST FLOOR PLAN	FLAT A1	FLAT	124.05	119.69	11	8
	FLAT A2	FLAT	100.00	96.97	10	
	FLAT A3	FLAT	100.00	97.20	10	
	FLAT A4	FLAT	124.05	119.69	11	
	FLAT A5	FLAT	120.46	116.19	11	
	FLAT A6	FLAT	100.43	97.41	10	
	FLAT A7	FLAT	100.43	97.41	10	
	FLAT A8	FLAT	120.46	116.19	11	
TYPICAL - 2- 14 FLOOR PLAN	FLAT B1	FLAT	124.05	119.69	11	104
	FLAT B4	FLAT	124.05	119.69	11	
	FLAT B5	FLAT	120.46	116.19	11	
	FLAT B7	FLAT	100.43	97.41	10	
	FLAT B8	FLAT	120.46	116.19	11	
	FLATB2	FLAT	100.00	96.97	10	
	FLATB3	FLAT	100.00	97.20	10	
	FLATB6	FLAT	100.43	97.41	10	
Total:	-	-	12458.47	12050.09	1176	112

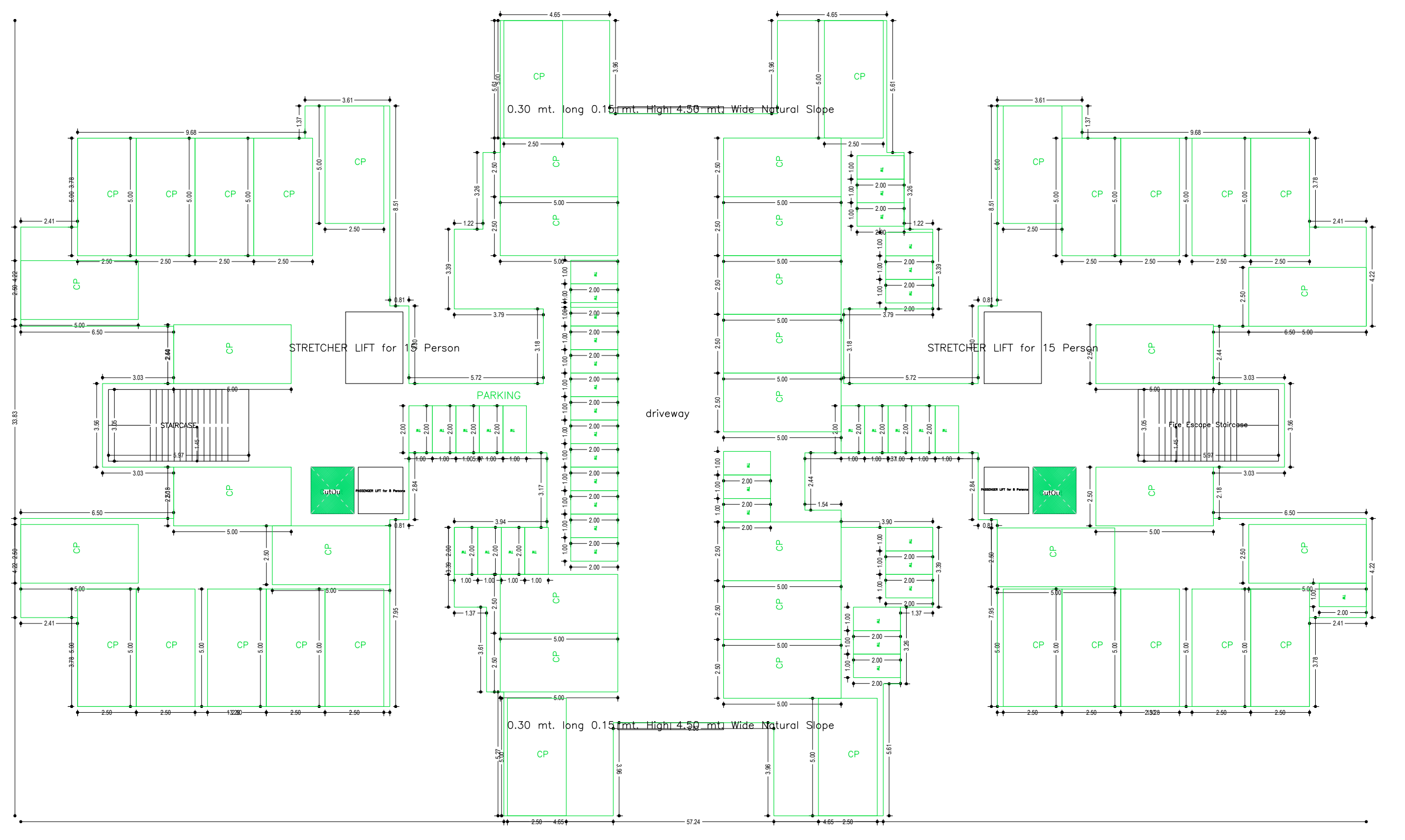
0.30 mt. long 0.15 mt. high 4.50 mt. Wide Natural Slope
STRETCHER LIFT for 15 Person
PARKING
driveway
CP

GROUND AND PARKING FLOOR PLAN
(SCALE 1:100)

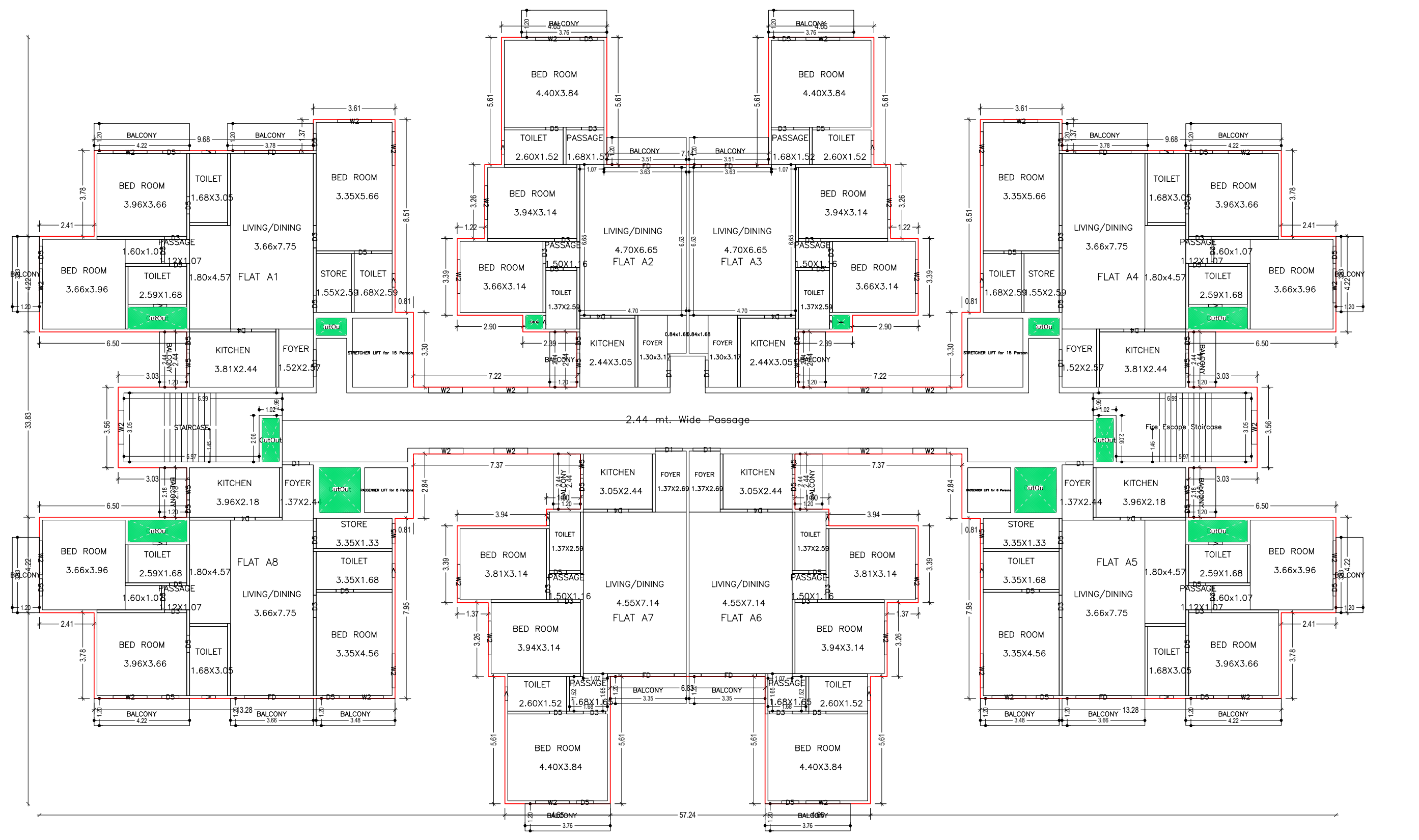
2.44 mt. Wide Passage
FLAT A1
FLAT A2
FLAT A3
FLAT A4
FLAT A5
FLAT A6
FLAT A7
FLAT A8
BED ROOM
TOILET
LIVING/DINING
KITCHEN
FOYER
STORE
PASSAGE
BALCONY

FIRST FLOOR PLAN
(Proposed)
(SCALE 1:100)

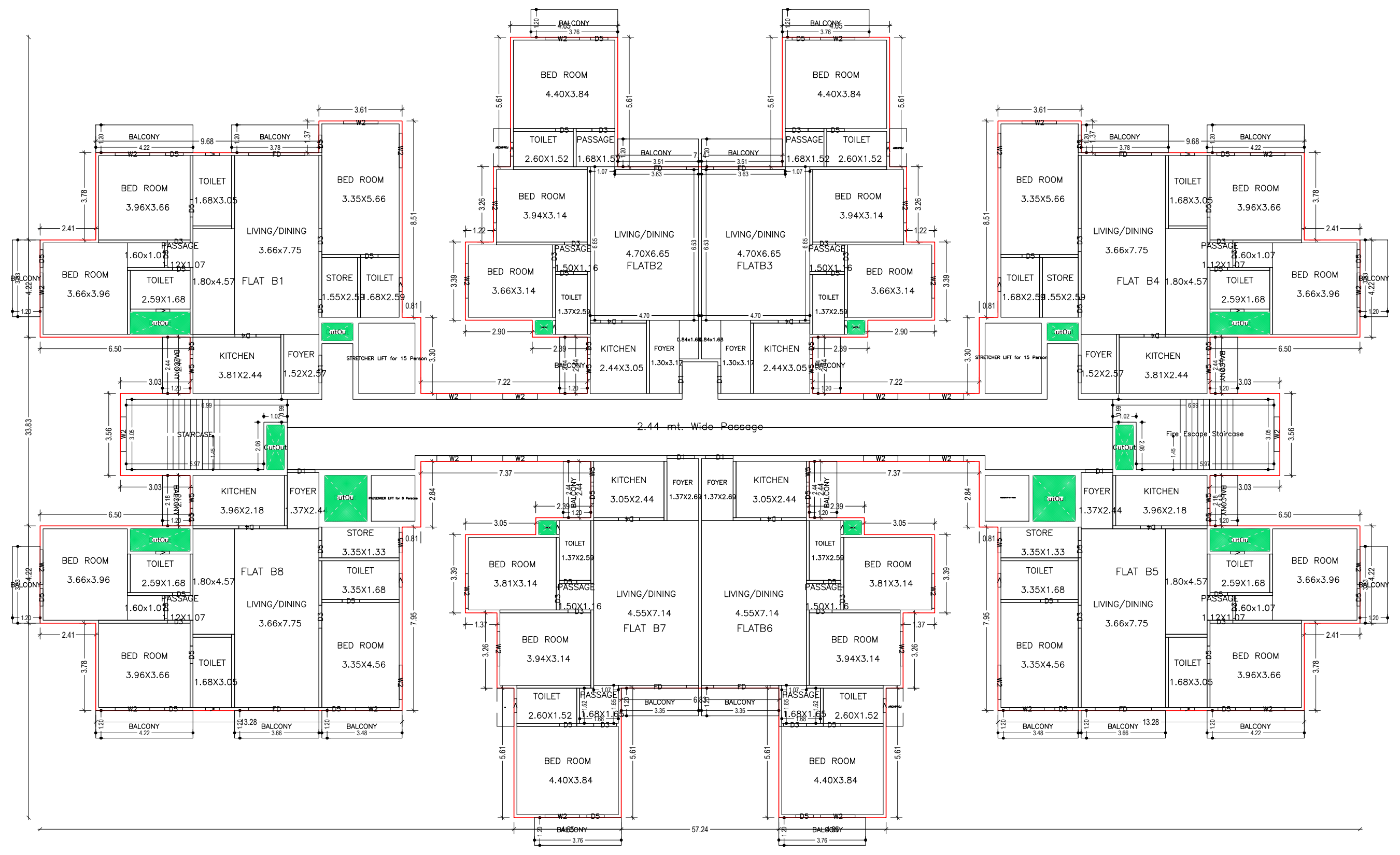
2.44 mt. Wide Passage
FLAT B1
FLATB2
FLATB3
FLAT B4
FLAT B5
FLATB6
FLAT B7
FLAT B8
BED ROOM
TOILET
LIVING/DINING
KITCHEN
FOYER
STORE
PASSAGE
BALCONY

TYPICAL - 2- 14 FLOOR PLAN
(Proposed)
(SCALE 1:100)

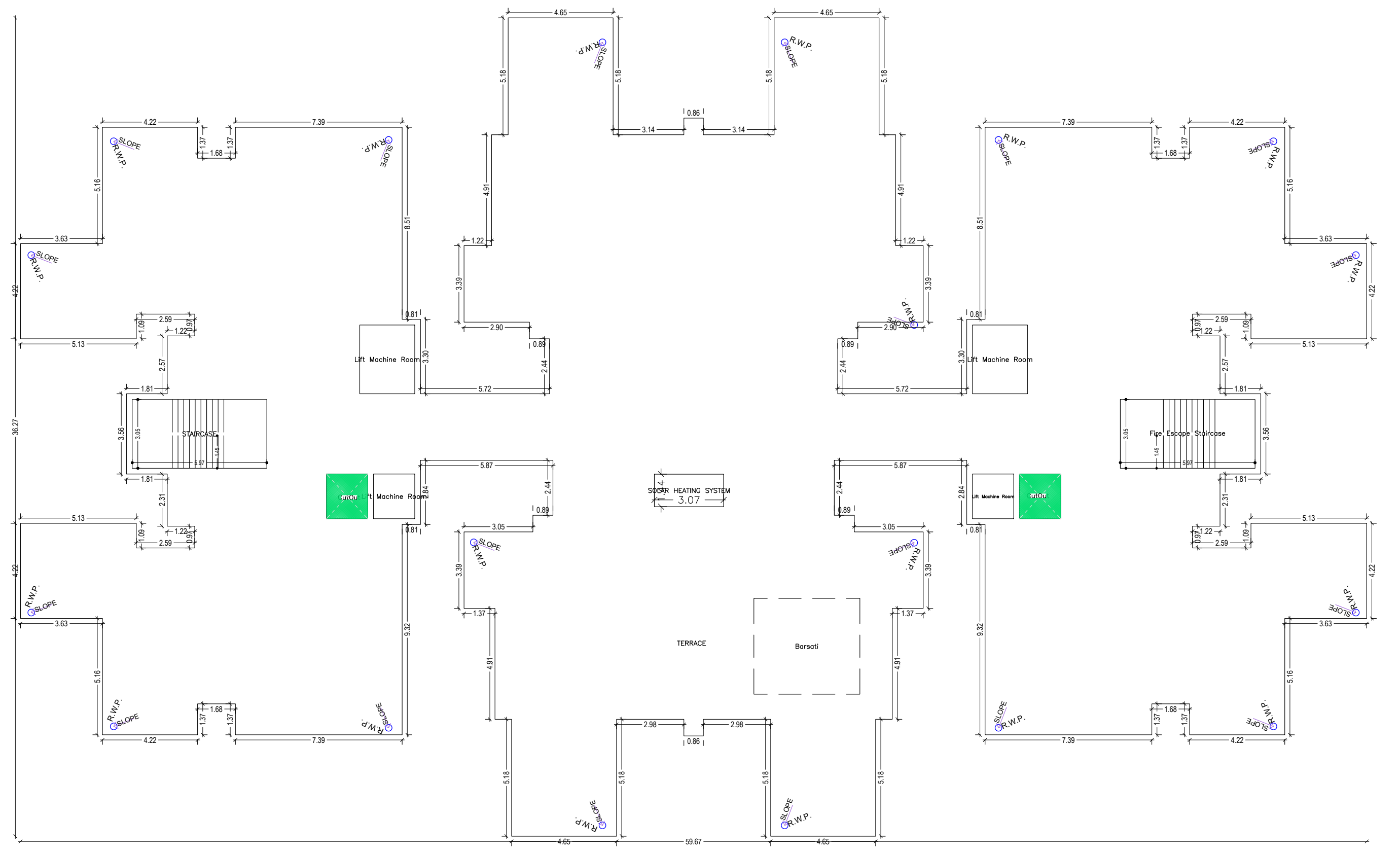
LIFT Machine Room
TERRACE

TERRACE FLOOR PLAN
(SCALE 1:100)

LTP NAME AND SIGNATURE	STRUCTURAL ENG'S NAME AND SIGNATURE	BUILDER NAME AND SIGNATURE	DIGITAL SIGNATURE
MANOJ KUMAR RMC/ART/0055/15-16			

Name : ARUN KUMAR
Designation : Townplanner
Organization :
GOVERNMENT OF

This is system generated MAP. No need to Physically Signed.

ISO_full_bleed_4A0_(1682.00_x_2378.00_MM)

Project Title :BUILDING

		DATE	20-10-2023
		SHEET NO.	4
		-	

Proposal Basic Information

Proposal File No.	RMC/AH/0423/W05/2022
Owner Name	UGNA Buildwell Pvt. Ltd. through Director Mr. Ajit Kumar
Khata No	117,49,03
Plot No	2381, 2386, 2387, 2388, 2389, 2413
Village Name	BADAGAAI
Use	Residential
SubUse	Low income group and EWS Housing

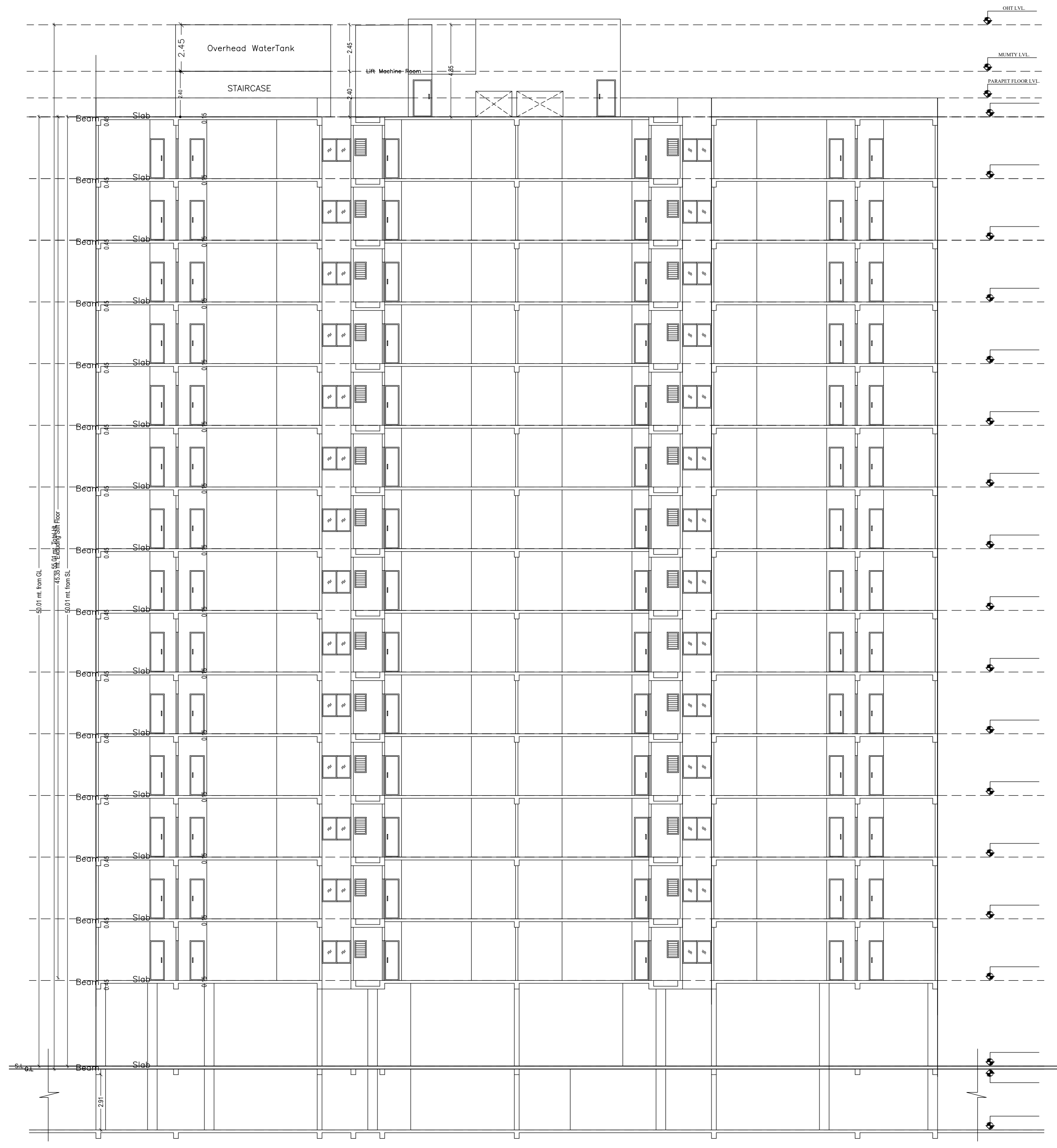
Overhead WaterTank
STAIRCASE
Lift Machine Room
2.45
2.40
4.85
Beam
Slab
OHT LVL.
MUMTY LVL.
PARAPET FLOOR LVL.

SECTION AA
SCALE - 1:100

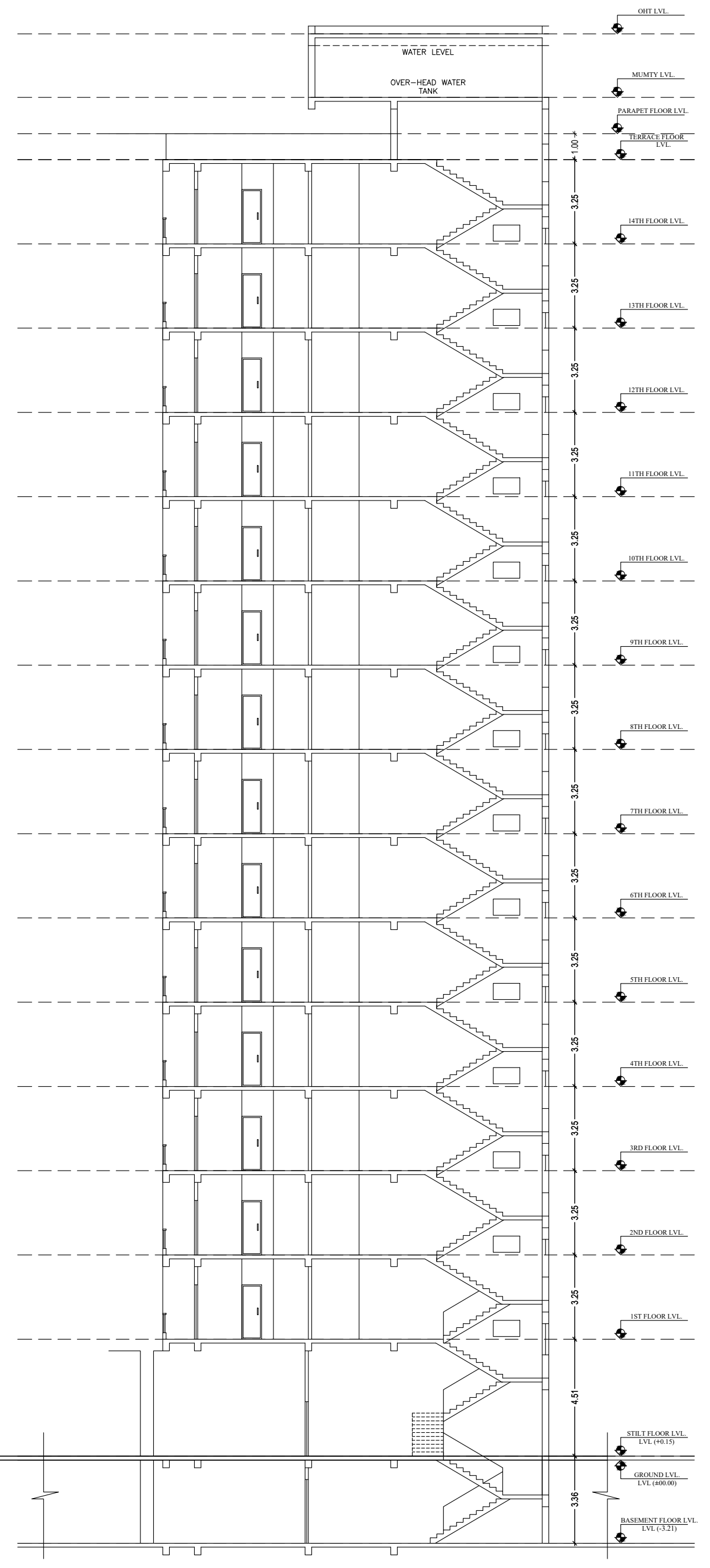

SECTION BB
SCALE - 1:100

BARGAIN SITE SURVEY PLAN
CLIENT-: UGNA BUILDWEL PVT LTD.

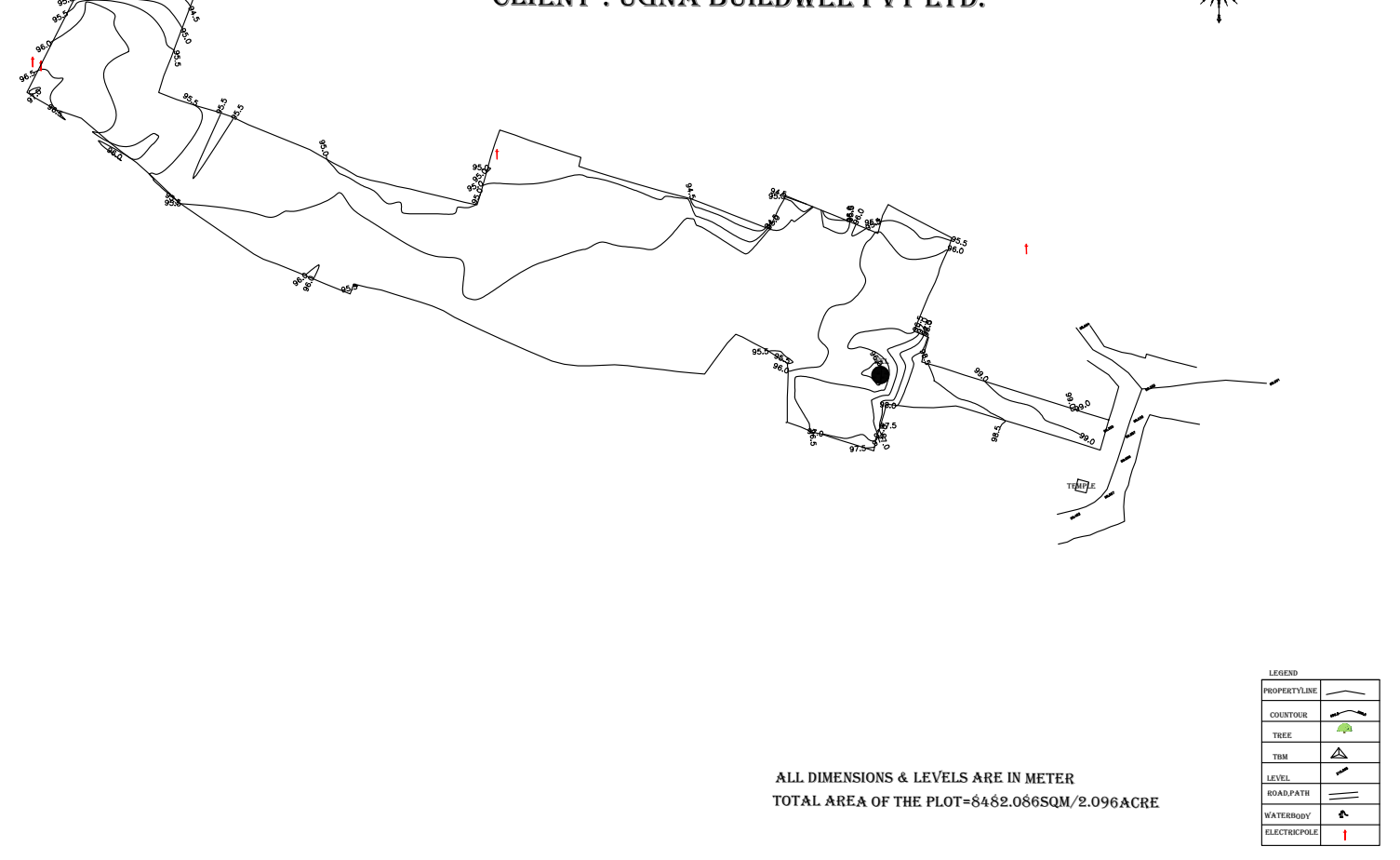
TEMPLE
LEGEND
PROPERTYLINE
COUNTOUR
TREE
TBM
LEVEL
ROAD,PATH
WATERBODY
ELECTRICPOLE

ALL DIMENSIONS & LEVELS ARE IN METER
TOTAL AREA OF THE PLOT=8482.086SQM/2.096ACRE

CERTIFICATE FOR STRUCTURE SAFETY

THIS IS CERTIFY THAT THE STRUCTURAL DESIGN OF THE BUILDING WILL BE AS PER I.S–1983–1984 & I.S.4326–1993 TO MAKE SAME EARTH QUAKE

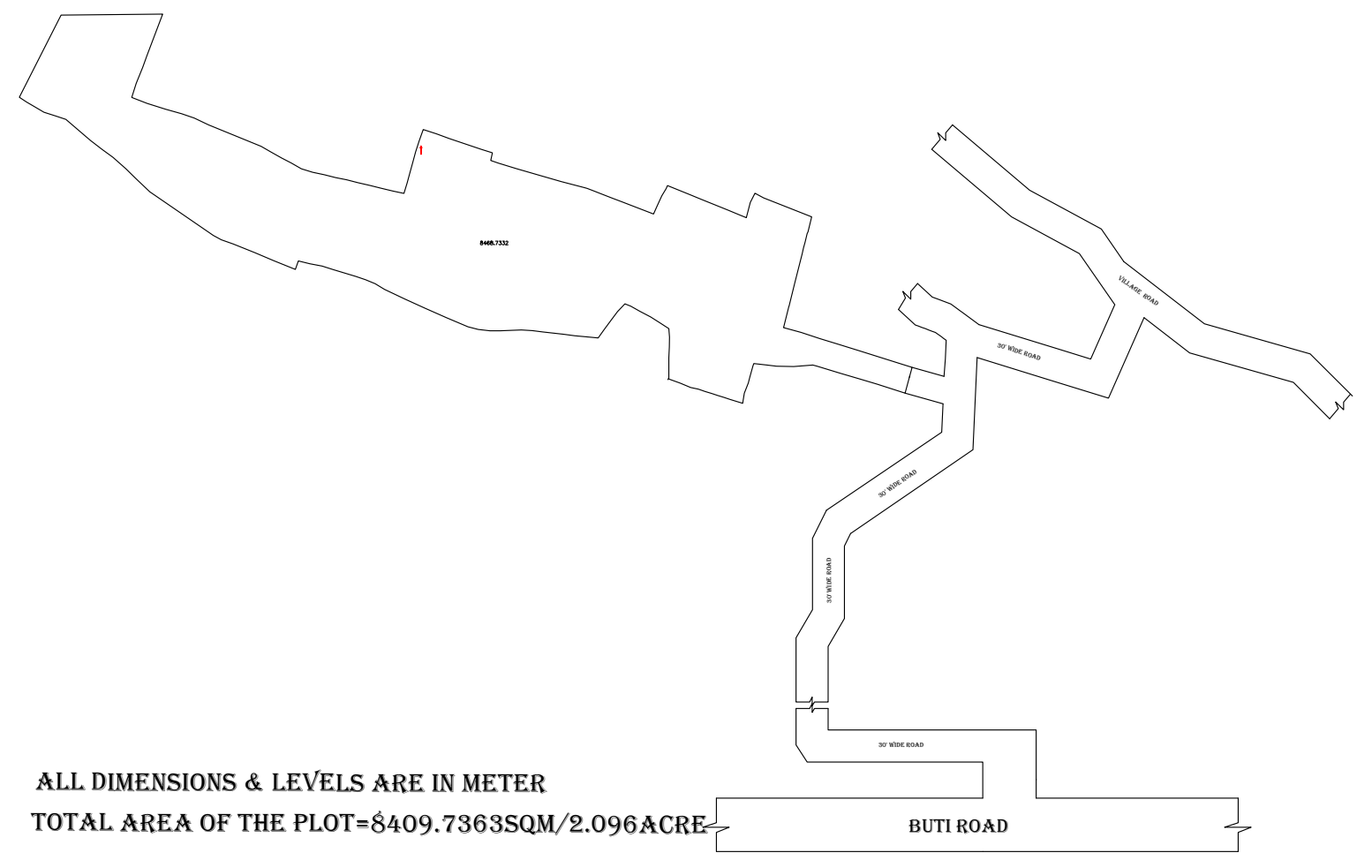
8468.7332
VILLAGE ROAD
30' WIDE ROAD
30' WIDE ROAD
30' WIDE ROAD
30' WIDE ROAD
BUTI ROAD

ALL DIMENSIONS & LEVELS ARE IN METER
TOTAL AREA OF THE PLOT=8409.7363SQM/2.096ACRE

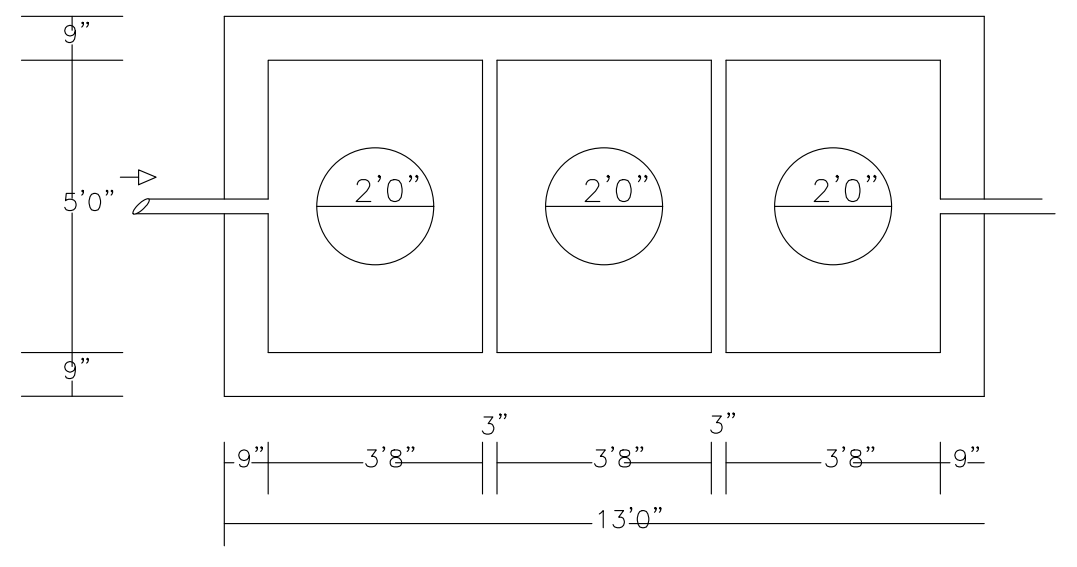
9"
5'0"
9"
2'0"
2'0"
2'0"
9"
3'8"
3"
3'8"
3"
3'8"
9"
13'0"

PLAN OF SEPTIC TANK
SCALE:– 1" = 4' – 0"

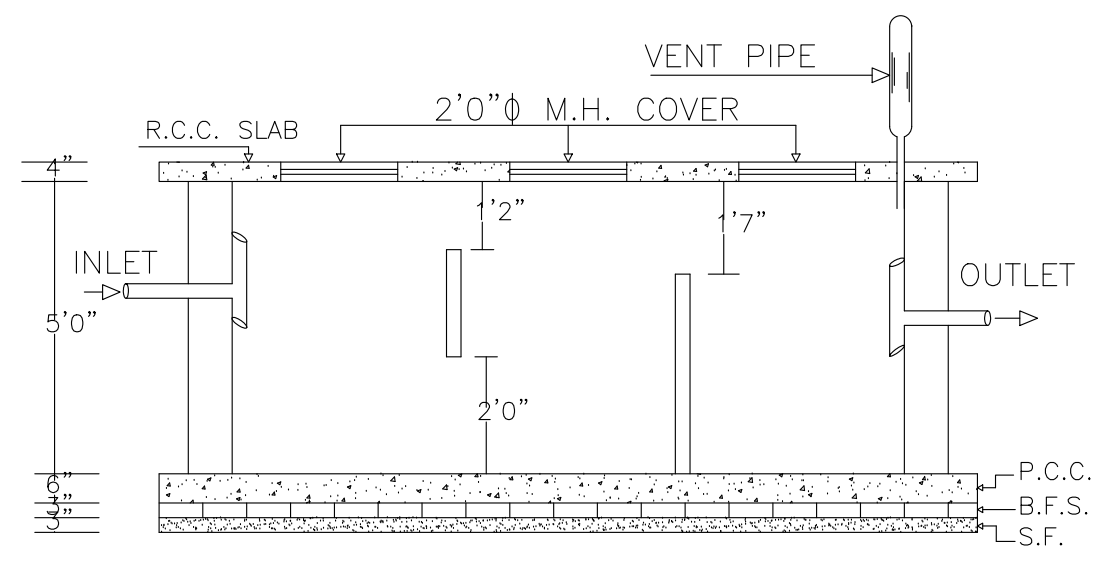
VENT PIPE
2'0"ɸ M.H. COVER
R.C.C. SLAB
4"
1'2"
1'7"
INLET
5'0"
OUTLET
2'0"
6"
3"
3"
P.C.C.
B.F.S.
S.F.

SECTION OF SEPTIC TANK

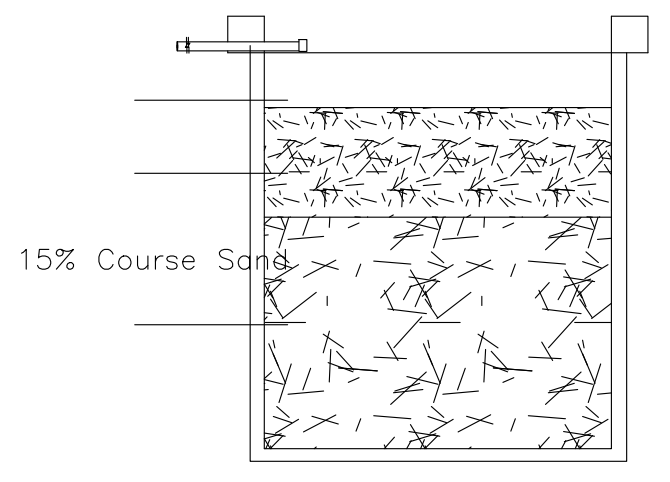
15% Course Sand

SECTION AT Y–Y

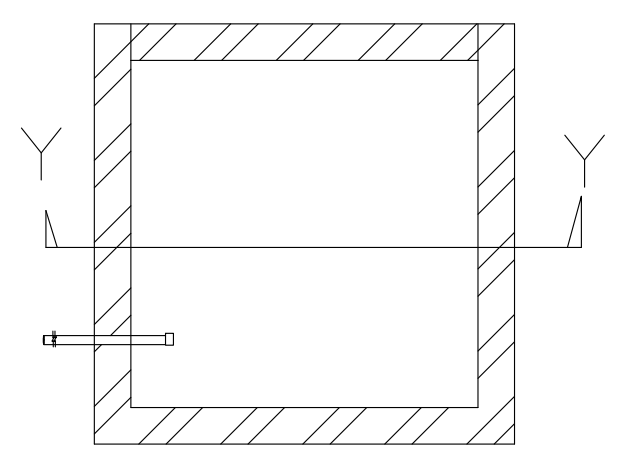

PLAN OF RECHARGE WELL

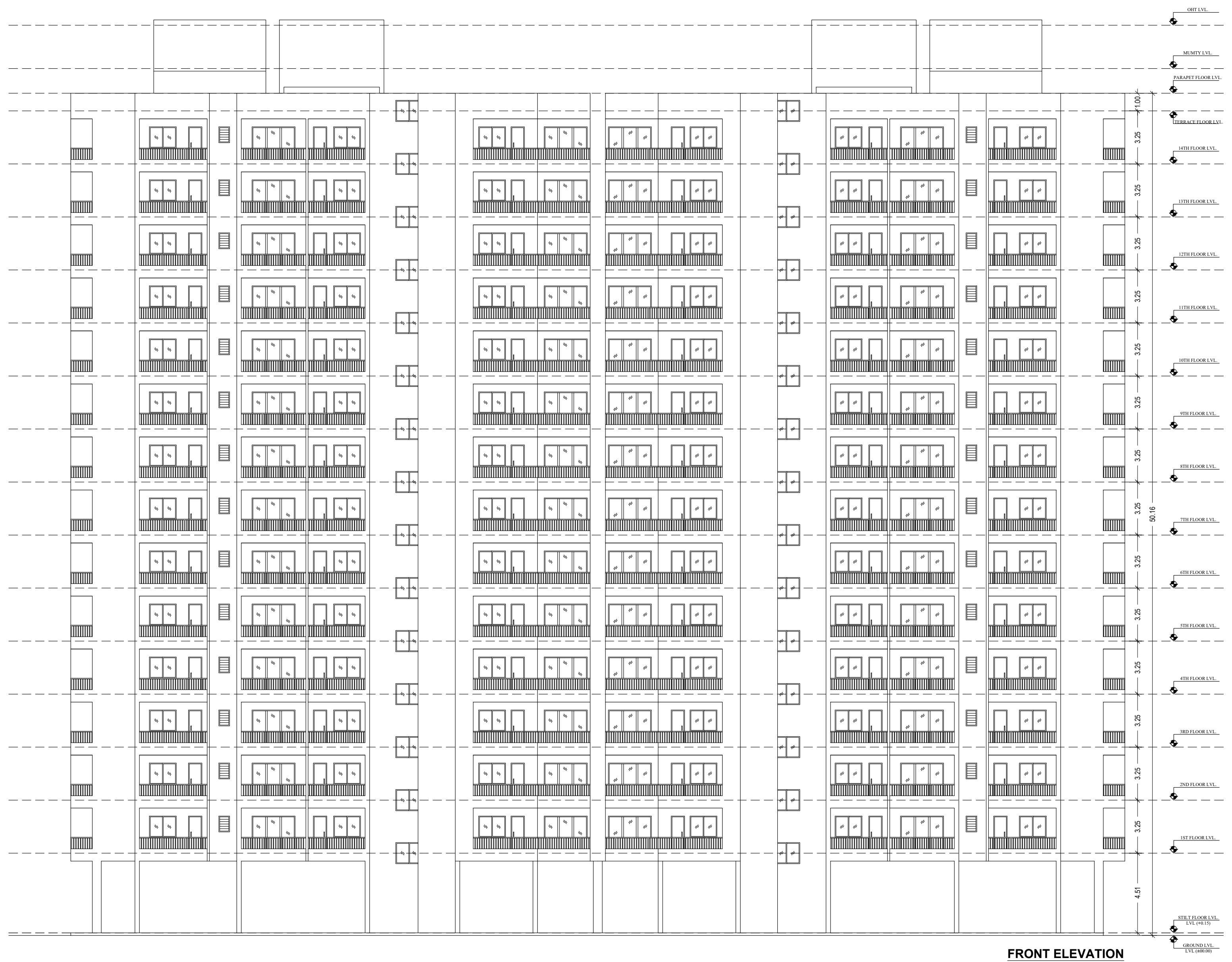

FRONT ELEVATION
SCALE - 1:100

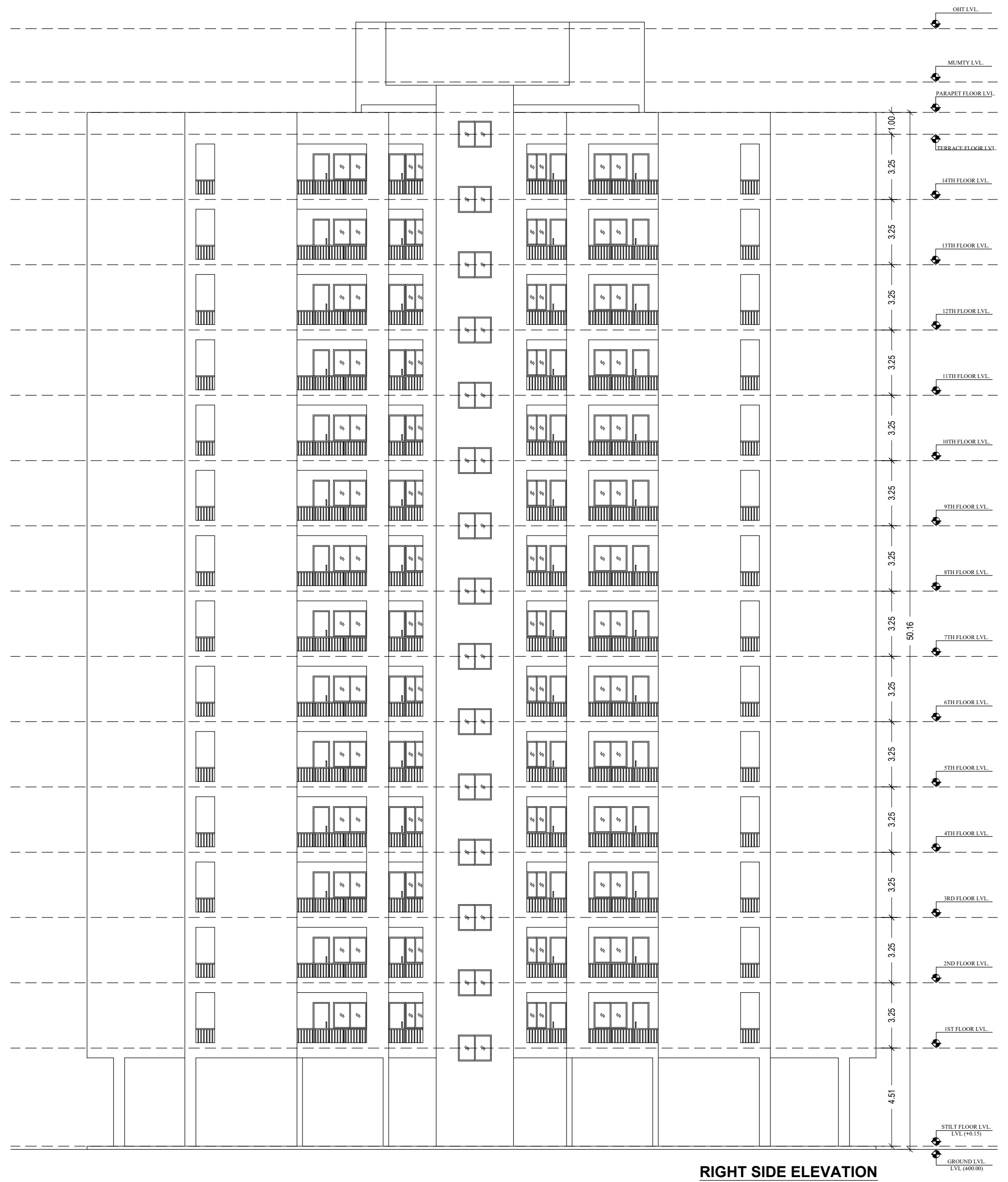

RIGHT SIDE ELEVATION
SCALE - 1:100

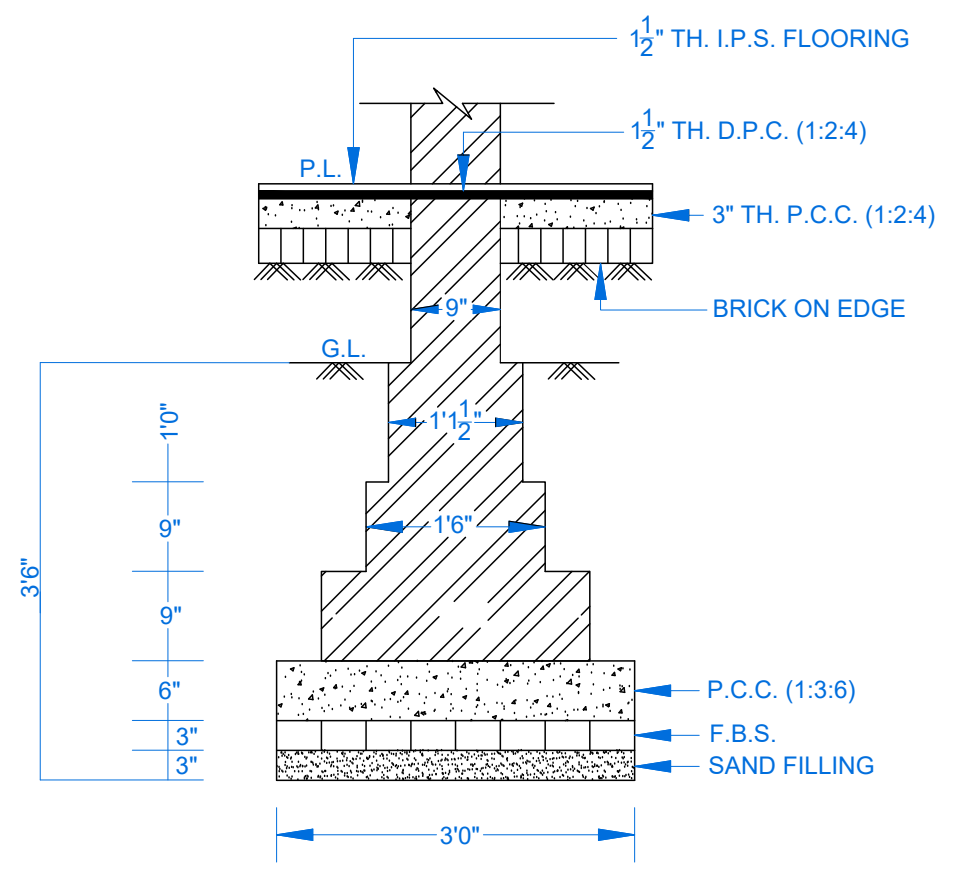
1½" TH. I.P.S. FLOORING
1½" TH. D.P.C. (1:2:4)
P.L.
3" TH. P.C.C. (1:2:4)
BRICK ON EDGE
9"
G.L.
1'0"
1'1½"
9"
1'6"
3'6"
9"
6"
3"
3"
P.C.C. (1:3:6)
F.B.S.
SAND FILLING
3'0"

-:DETAIL OF BRICK FOUNDATION:-
SCALE:- 1" = 2' - 0"

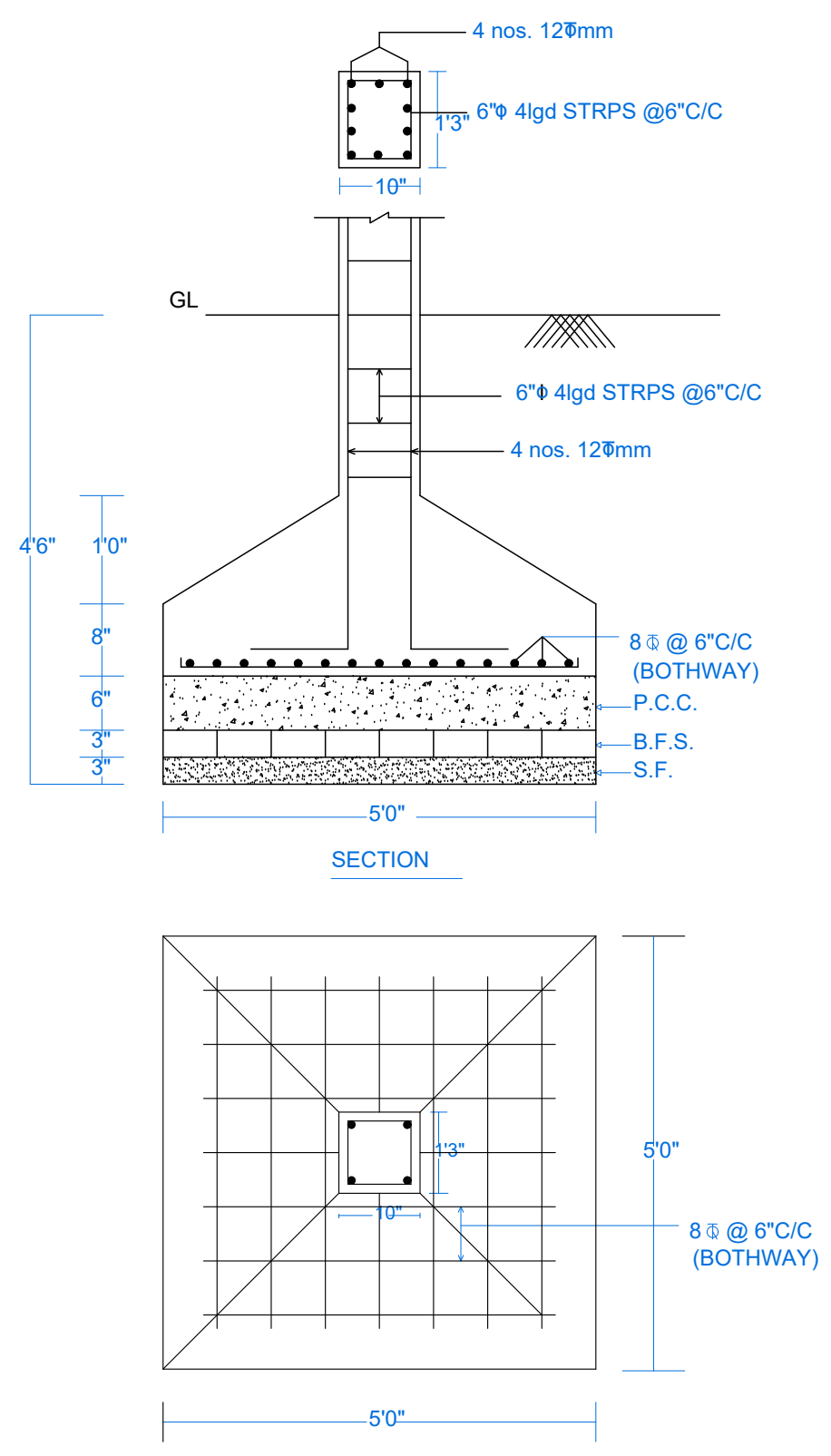
4 nos. 12ɸmm
6"ɸ 4lgd STRPS @6"C/C
1'3"
10"
GL
6"ɸ 4lgd STRPS @6"C/C
4 nos. 12ɸmm
4'6"
1'0"
8"
6"
3"
3"
8 ɸ @ 6"C/C
(BOTHWAY)
P.C.C.
B.F.S.
S.F.
5'0"
1'3"
10"
5'0"
8 ɸ @ 6"C/C
(BOTHWAY)
5'0"

SECTION

PLAN

DETAIL OF COLUMNS
SCALE:- 1" = 2' - 0"

LTP NAME AND SIGNATURE	STRUCTURAL ENG'S NAME AND SIGNATURE	BUILDER NAME AND SIGNATURE	DIGITAL SIGNATURE
MANOJ KUMAR RMC/ART/0055/15-16			

Name : ARUN KUMAR
Designation : Townplanner
Organization : :
GOVERNMENT OF

This is system generated MAP. No need to Physically Signed.

ISO_full_bleed_4A0_(1682.00_x_2378.00_MM)

DATE	20-10-2023
SHEET NO.	5
	-

Proposal Basic Information

Proposal File No.	RMC/AH/0423/W05/2022
Owner Name	UGNA Buildwell Pvt. Ltd. through Director Mr. Ajit Kumar
Khata No	117,49,03
Plot No	2381, 2386, 2387, 2388, 2389, 2413
Village Name	BADAGAAI
Use	Residential
SubUse	Low income group and EWS Housing

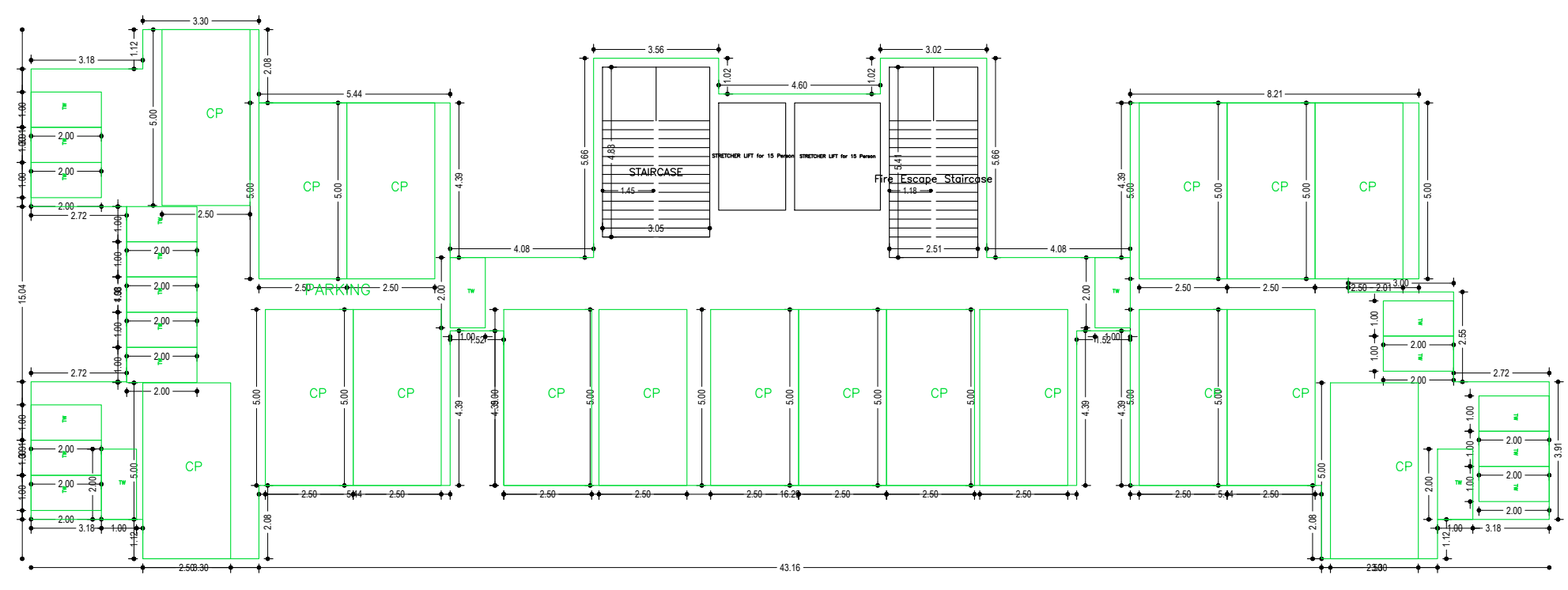

GROUND AND PARKING FLOOR PLAN
(SCALE 1:100)

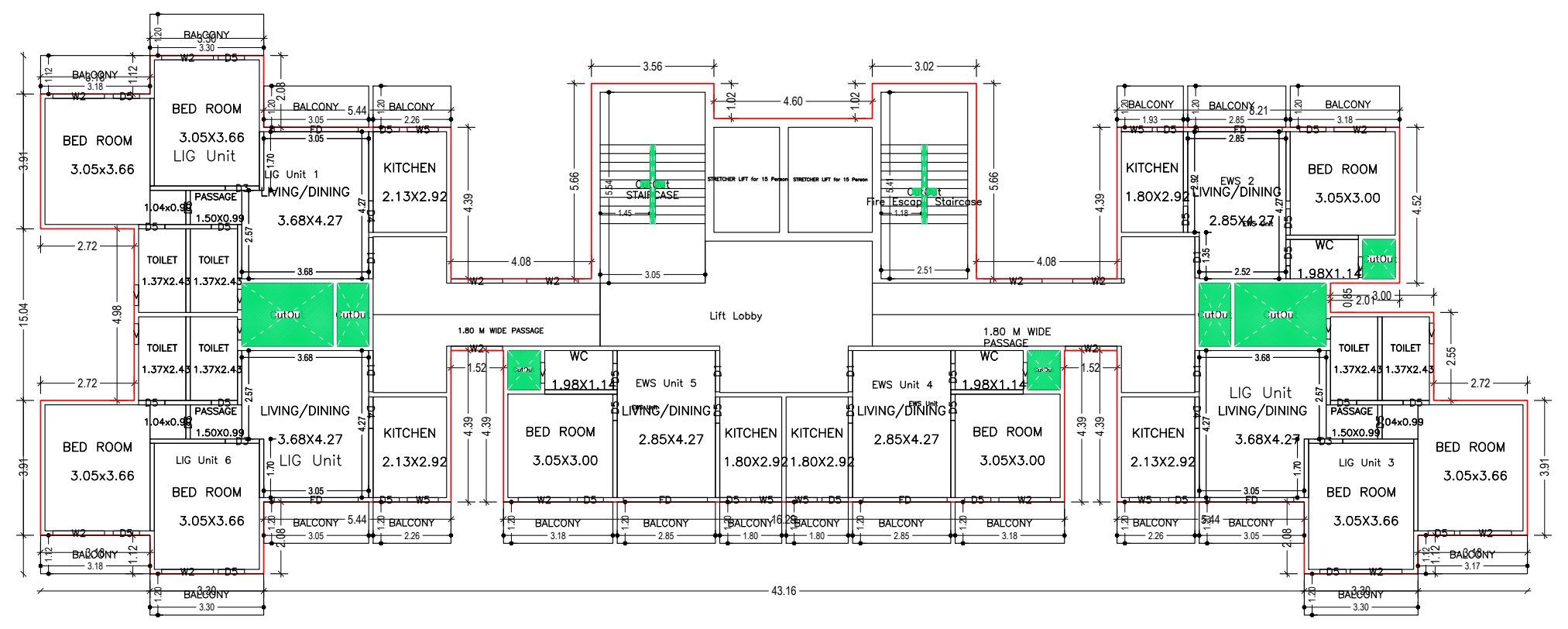
BED ROOM
3.05x3.66
LIG Unit
LIVING/DINING
KITCHEN
TOILET
BALCONY
EWS Unit
LIFT Lobby

FIRST FLOOR PLAN
(Proposed)
(SCALE 1:100)

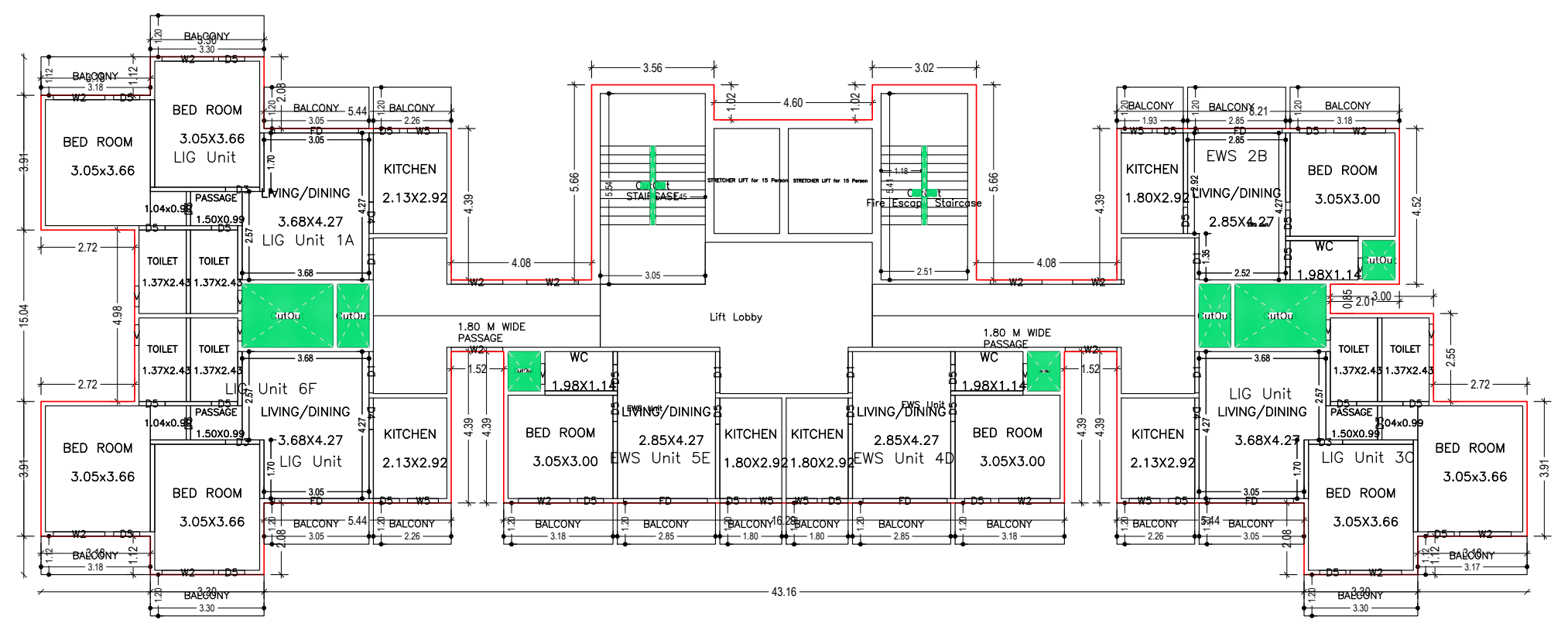
BED ROOM
LIG Unit 1A
LIG Unit 6F
LIG Unit 3C
EWS 2B
EWS Unit 4D
EWS Unit 5E
LIVING/DINING
KITCHEN
LIFT Lobby

TYPICAL - 2- 15 FLOOR PLAN
(Proposed)
(SCALE 1:100)

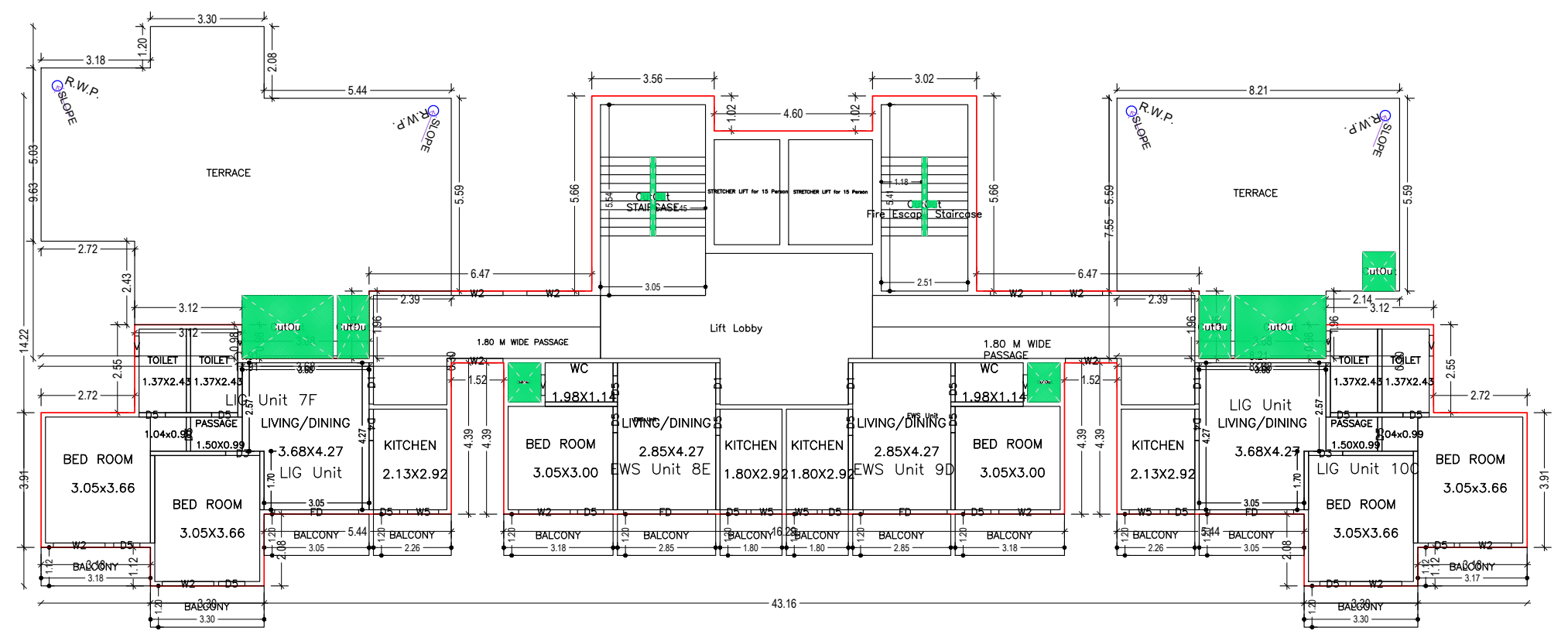
TERRACE
LIG Unit 7F
LIG Unit 10C
EWS Unit 8E
EWS Unit 9D
LIVING/DINING
KITCHEN
BED ROOM
LIFT Lobby

SIXTEENTH FLOOR PLAN
(Proposed)
(SCALE 1:100)

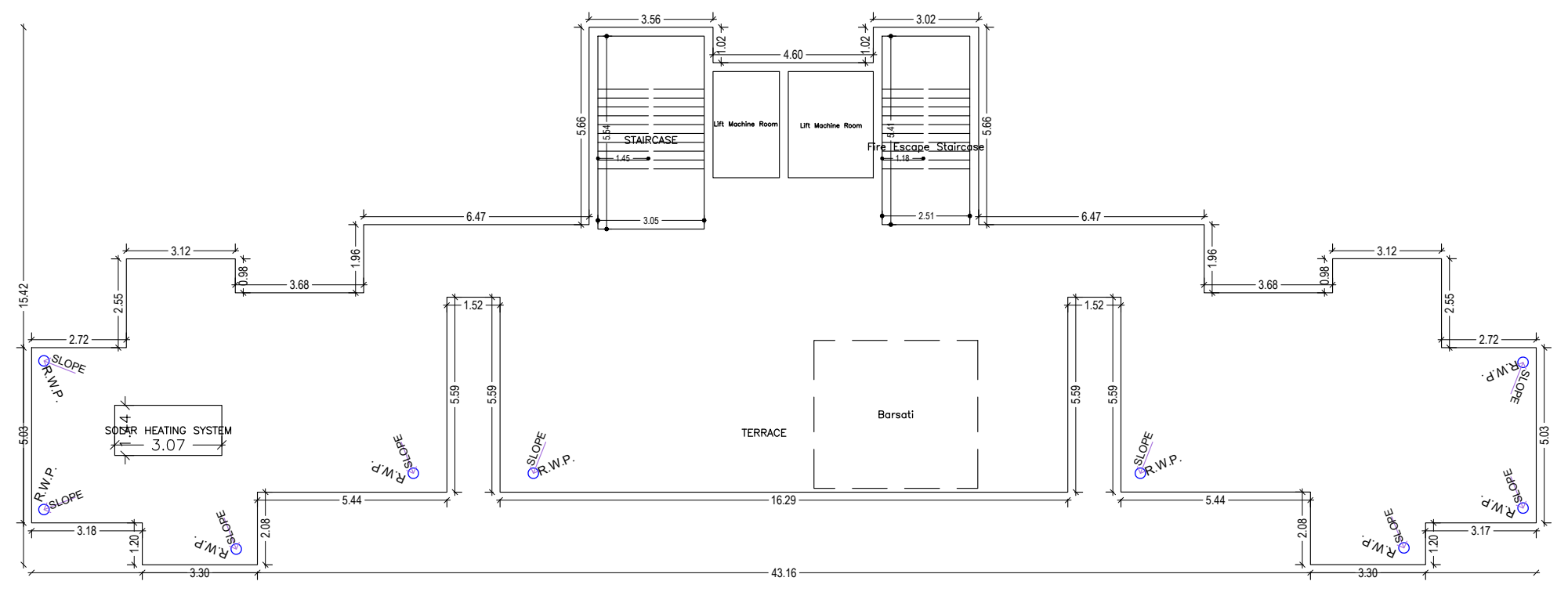

TERRACE FLOOR PLAN
(SCALE 1:100)

Building :C (BUILDING)

Floor Name	Gross Builtup Area	Deductions From Gross BUA(Area in Sq.mt.)	Total Built Up Area (Sq.mt.)	Deductions (Area in Sq.mt.)				Proposed FAR Area (Sq.mt.)	Add Area In FAR (Sq.mt.)	Total FAR Area (Sq.mt.)	Total Consumed Additional FAR Area (Sq.mt.)	Tnmt (No.)	Carpet Area other than Tenement
		Cutout		StairCase	Lift	Balcony	Parking	Resi.	Stair				
Ground And Parking Floor	418.16	0.00	418.16	13.60	0.00	0.00	376.61	0.00	14.71	27.95	27.95	00	0.00
First Floor	487.17	16.94	470.23	13.26	13.24	69.96	0.00	373.77	0.00	373.77	373.77	06	29.53
Second Floor	487.17	16.94	470.23	13.26	13.24	69.96	0.00	373.77	0.00	373.77	373.77	06	413.43
Third Floor	487.17	16.94	470.23	13.26	13.24	69.96	0.00	373.77	0.00	373.77	373.77	06	413.43
Fourth Floor	487.17	16.94	470.23	13.26	13.24	69.96	0.00	373.77	0.00	373.77	373.77	06	413.43
Fifth Floor	487.17	16.94	470.23	13.26	13.24	69.96	0.00	373.77	0.00	373.77	373.77	06	413.43
Sixth Floor	487.17	16.94	470.23	13.26	13.24	69.96	0.00	373.77	0.00	373.77	373.77	06	413.43
Seventh Floor	487.17	16.94	470.23	13.26	13.24	69.96	0.00	373.77	0.00	373.77	373.77	06	413.43
Eighth Floor	487.17	16.94	470.23	13.26	13.24	69.96	0.00	373.77	0.00	373.77	373.77	06	413.43
Ninth Floor	487.17	16.94	470.23	13.26	13.24	69.96	0.00	373.77	0.00	373.77	373.77	06	413.43
Tenth Floor	487.17	16.94	470.23	13.26	13.24	69.96	0.00	373.77	0.00	373.77	373.77	06	413.43
Eleventh Floor	487.17	16.94	470.23	13.26	13.24	69.96	0.00	373.77	0.00	373.77	373.77	06	413.43
Twelfth Floor	487.17	16.94	470.23	13.26	13.24	69.96	0.00	373.77	0.00	373.77	373.77	06	413.43
Thirteenth Floor	487.17	16.94	470.23	13.26	13.24	69.96	0.00	373.77	0.00	373.77	373.77	06	413.43
Fourteenth Floor	487.17	16.94	470.23	13.26	13.24	69.96	0.00	373.77	0.00	373.77	373.77	06	413.43
Fifteenth Floor	487.17	16.94	470.23	13.26	13.24	69.96	0.00	373.77	0.00	373.77	373.77	06	413.43
Sixteenth Floor	365.58	16.94	348.64	13.26	13.24	46.54	0.00	275.60	0.00	275.60	275.60	04	29.98
Terrace Floor	0.00	0.00	0.00	0.00	0.00	0.00	0.00	0.00	0.00	0.00	0.00	00	0.00
Total :	8091.29	271.04	7820.25	225.76	211.84	1095.94	376.61	5882.15	14.71	5910.10	5910.10	94	5847.53
Total Number of Same Buildings :	1												
Total :	8091.29	271.04	7820.25	225.76	211.84	1095.94	376.61	5882.15	14.71	5910.10	5910.10	94	5848

SCHEDULE OF DOOR:

BUILDING NAME	NAME	LENGTH	HEIGHT	NOS
C (BUILDING)	D5	0.76	2.10	470
C (BUILDING)	D4	0.91	2.10	47
C (BUILDING)	D3	0.99	2.10	94
C (BUILDING)	D1	1.20	2.10	94
C (BUILDING)	FD	2.44	2.10	94

SCHEDULE OF WINDOW/VENTILATION:

BUILDING NAME	NAME	LENGTH	HEIGHT	NOS
C (BUILDING)	V	0.60	1.20	141
C (BUILDING)	W5	0.90	1.20	94
C (BUILDING)	W2	1.50	1.20	237

Balcony Calculations Table

FLOOR	SIZE	AREA	TOTAL AREA
FIRST FLOOR PLAN	1.12 X 3.18 X 3 X 1	10.65	69.96
	1.20 X 3.30 X 3 X 1	11.88	
	1.20 X 3.05 X 3 X 1	10.98	
	1.20 X 2.26 X 3 X 1	8.13	
	1.20 X 3.18 X 3 X 1	11.43	
	1.20 X 2.85 X 3 X 1	10.26	
	1.20 X 1.80 X 2 X 1	4.32	
	1.20 X 1.93 X 1 X 1	2.31	
TYPICAL - 2- 15 FLOOR PLAN	1.20 X 3.05 X 3 X 14	153.72	979.44
	1.20 X 3.30 X 3 X 14	166.32	
	1.12 X 3.18 X 3 X 14	149.10	
	1.20 X 2.26 X 3 X 14	113.82	
	1.20 X 3.18 X 3 X 14	160.02	
	1.20 X 2.85 X 3 X 14	143.64	
	1.20 X 1.80 X 2 X 14	60.48	
	1.20 X 1.93 X 1 X 14	32.34	
SIXTEENTH FLOOR PLAN	1.12 X 3.18 X 2 X 1	7.10	46.54
	1.20 X 3.05 X 2 X 1	7.32	
	1.20 X 3.30 X 2 X 1	7.92	
	1.20 X 2.26 X 2 X 1	5.42	
	1.20 X 3.18 X 2 X 1	7.62	
	1.20 X 2.85 X 2 X 1	6.84	
	1.20 X 1.80 X 2 X 1	4.32	
Total	-	-	1095.94

UnitBUA Table for Building :C (BUILDING)

FLOOR	Name	UnitBUA Type	UnitBUA Area	Carpet Area	No. of Rooms	No. of Tenement
FIRST FLOOR PLAN	EWS 2	EWS UNIT	29.53	28.71	4	6
	EWS Unit 4	EWS UNIT	29.98	29.11	4	
	EWS Unit 5	EWS UNIT	29.98	29.11	4	
	LIG Unit 1	LIG UNIT	54.65	52.90	7	
	LIG Unit 3	LIG UNIT	54.65	52.90	7	
	LIG Unit 6	LIG UNIT	54.65	52.90	7	
TYPICAL - 2- 15 FLOOR PLAN	EWS 2B	EWS UNIT	29.53	28.71	4	84
	EWS Unit 4D	EWS UNIT	29.98	29.11	4	
	EWS Unit 5E	EWS UNIT	29.98	29.11	4	
	LIG Unit 1A	LIG UNIT	54.65	52.90	7	
	LIG Unit 3C	LIG UNIT	54.65	52.90	7	
	LIG Unit 6F	LIG UNIT	54.65	52.90	7	
SIXTEENTH FLOOR PLAN	EWS Unit 8E	EWS UNIT	29.98	29.11	4	4
	EWS Unit 9D	EWS UNIT	29.98	29.11	4	
	LIG Unit 10C	LIG UNIT	54.65	52.90	7	
	LIG Unit 7F	LIG UNIT	54.65	52.90	7	
Total:	-	-	3970.69	3848.10	517	94

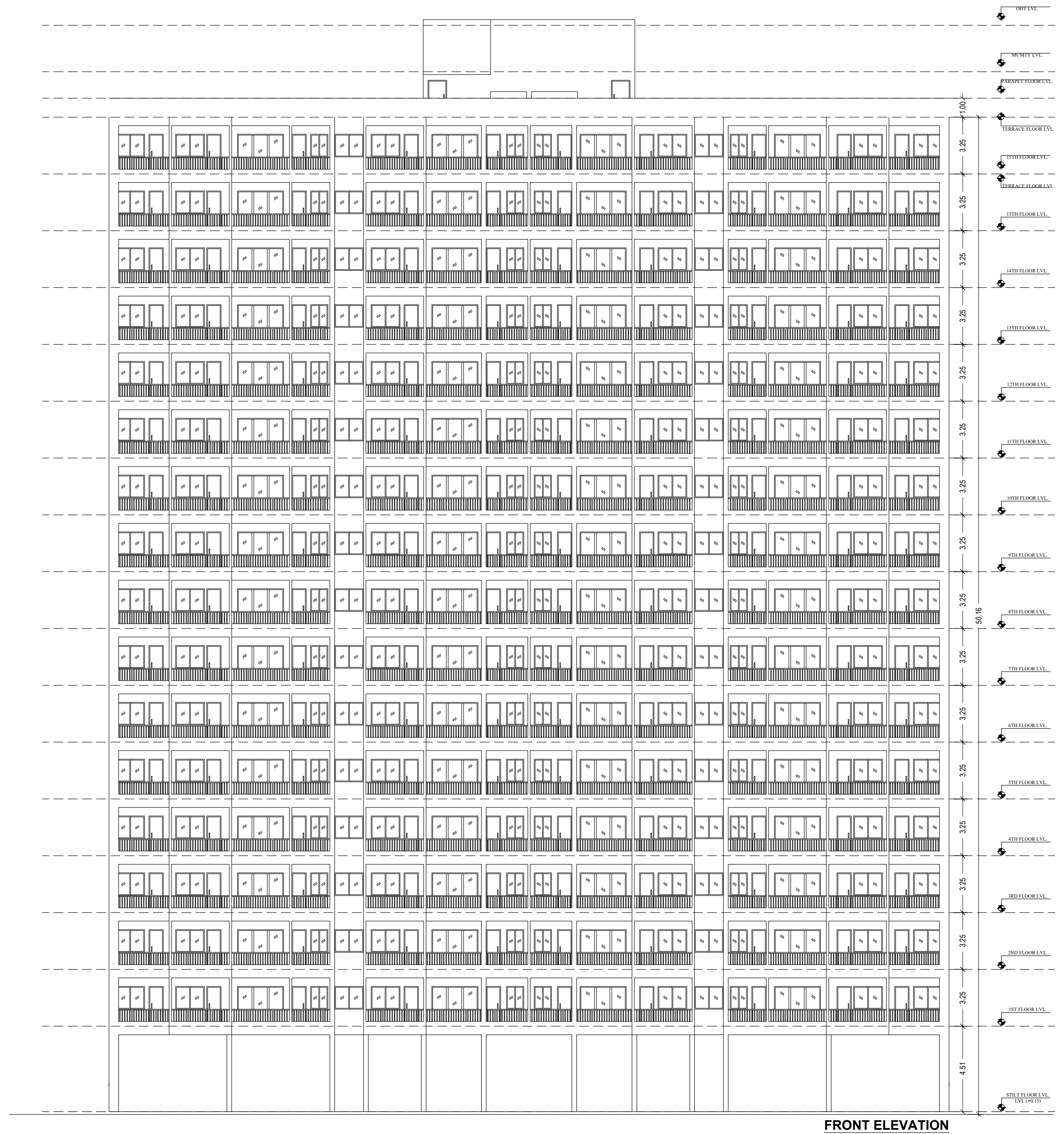

FRONT ELEVATION
SCALE - 1:100

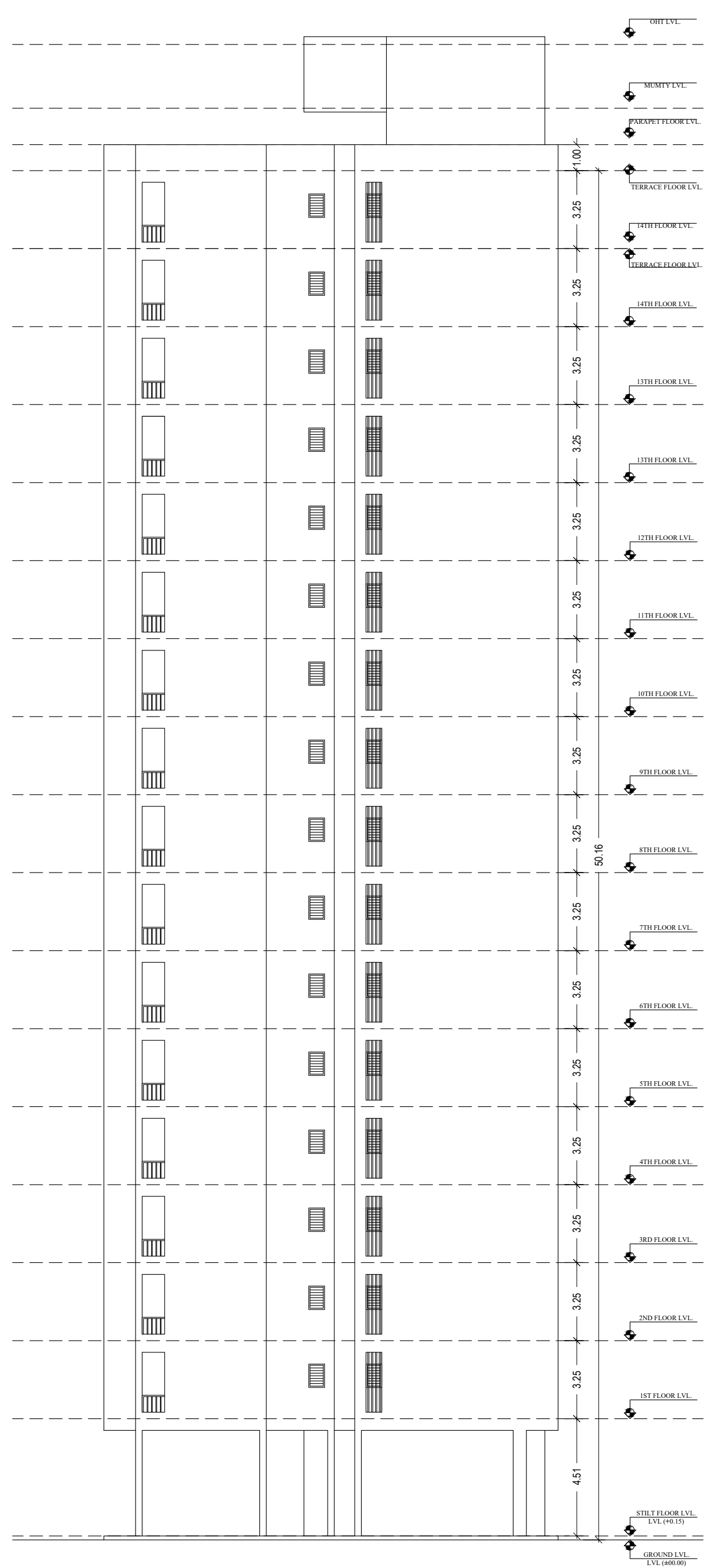

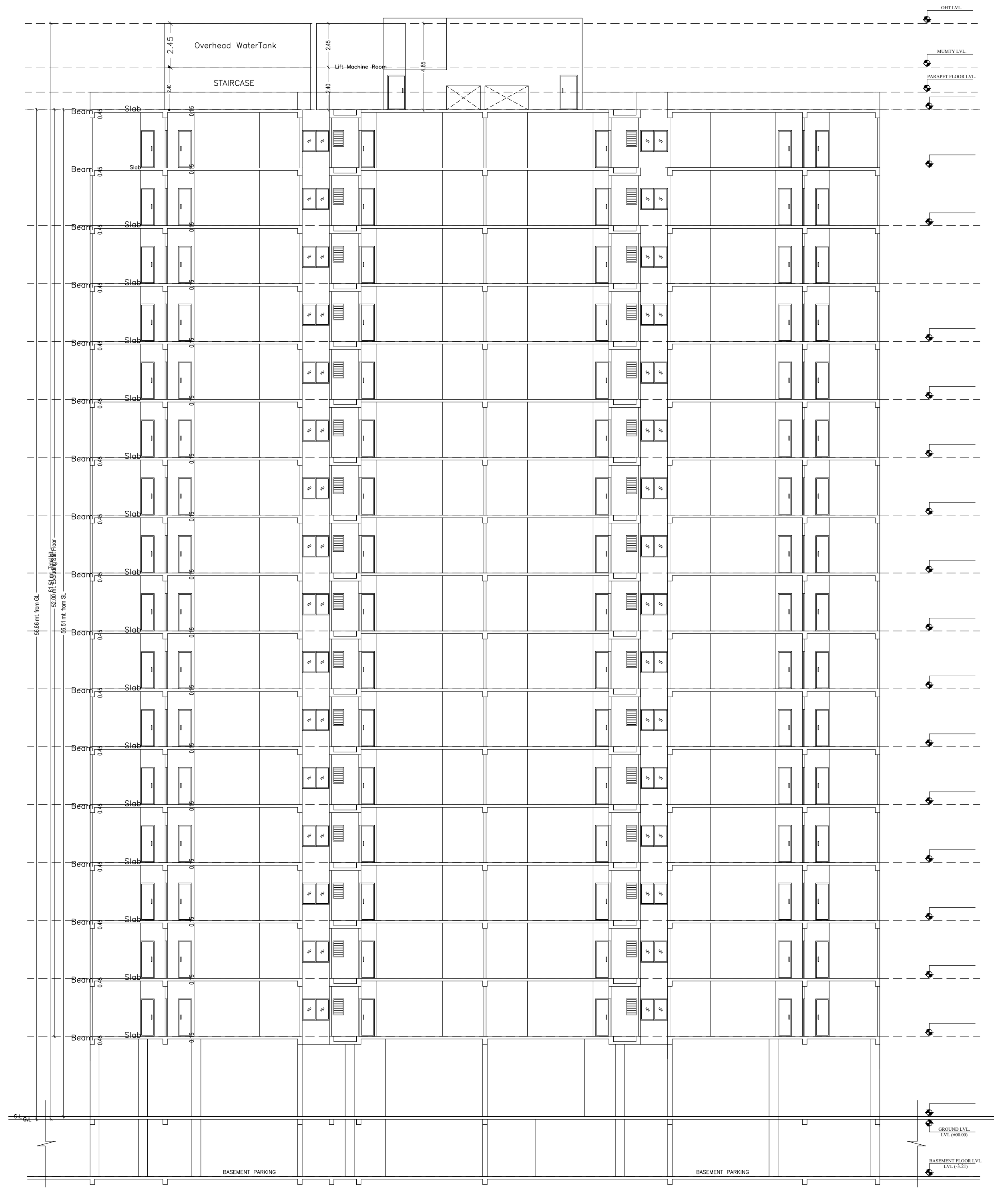
Overhead WaterTank
STAIRCASE
Beam
BASEMENT PARKING

SECTION AA
SCALE - 1:100

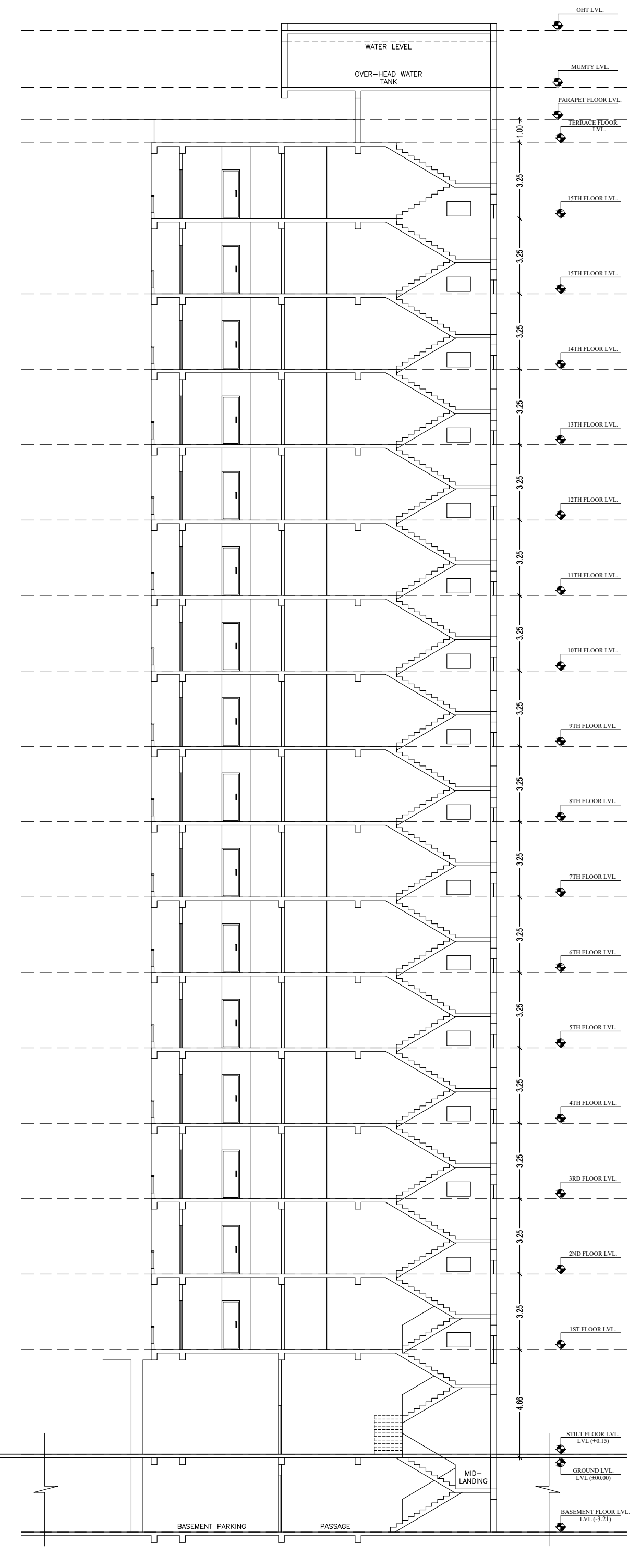
OVER HEAD WATER TANK
BASEMENT PARKING
PASSAGE

SECTION BB
SCALE - 1:100

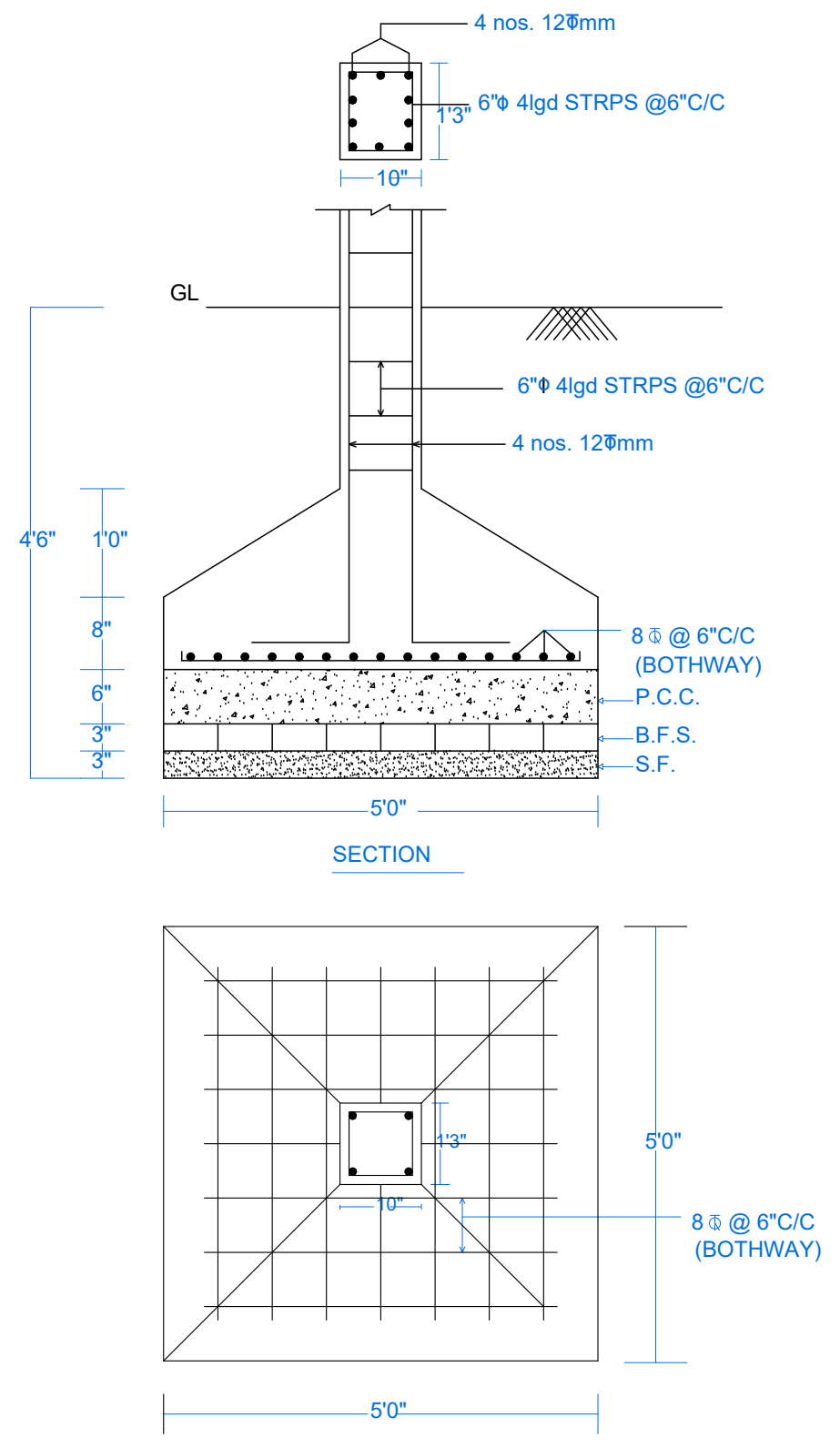
4 nos. 12Φmm
6"Φ 4lgd STRPS @6"C/C
1'3"
10"
GL
4'6"
1'0"
8"
6"
3"
3"
8 Φ @ 6"C/C
(BOTHWAY)
P.C.C.
B.F.S.
S.F.
5'0"
SECTION
5'0"
5'0"
8 Φ @ 6"C/C
(BOTHWAY)

PLAN

DETAIL OF COLUMNS

SCALE:- 1" = 2' - 0"

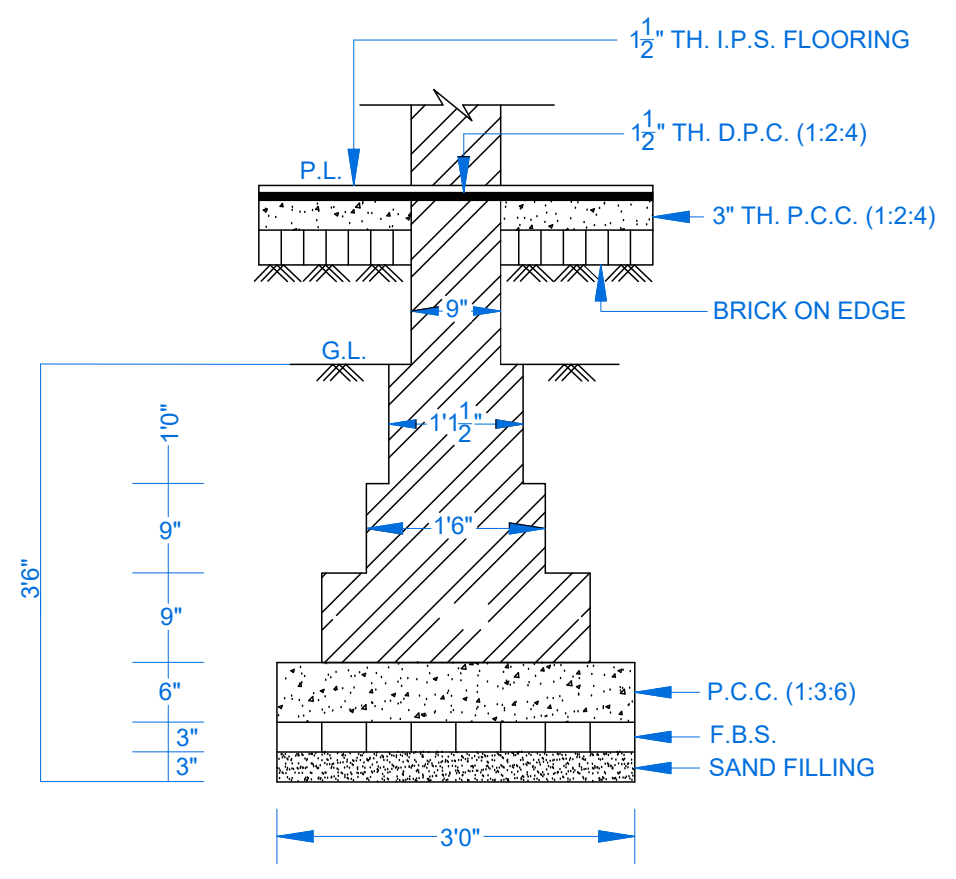
1½" TH. I.P.S. FLOORING
1½" TH. D.P.C. (1:2:4)
3" TH. P.C.C. (1:2:4)
BRICK ON EDGE
P.L.
G.L.
9"
1'1½"
1'6"
3'6"
1'0"
9"
9"
6"
3"
3"
P.C.C. (1:3:6)
F.B.S.
SAND FILLING
3'0"

-:DETAIL OF BRICK FOUNDATION:-

SCALE:- 1" = 2' - 0"

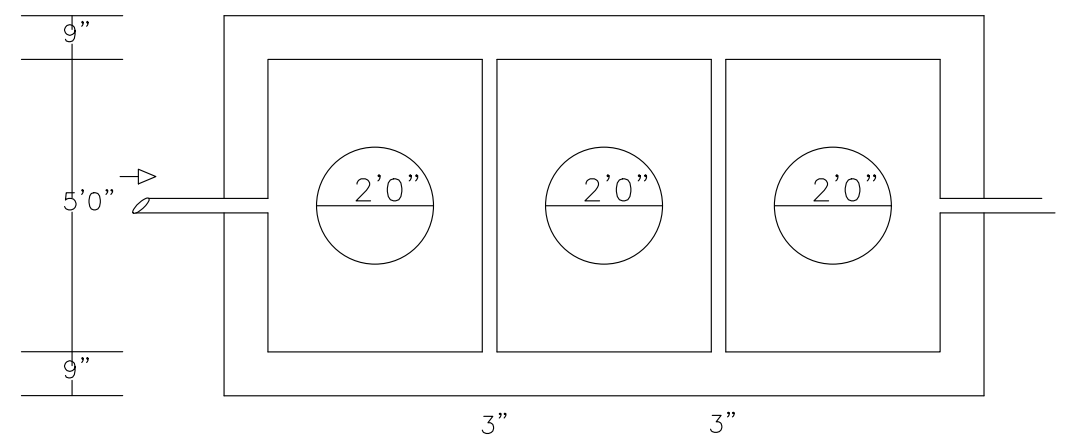
2'0"
2'0"
2'0"
5'0"
9"
3'8"
3"
3'8"
3"
3'8"
9"
13'0"

PLAN OF SEPTIC TANK
SCALE:- 1" = 4' - 0"

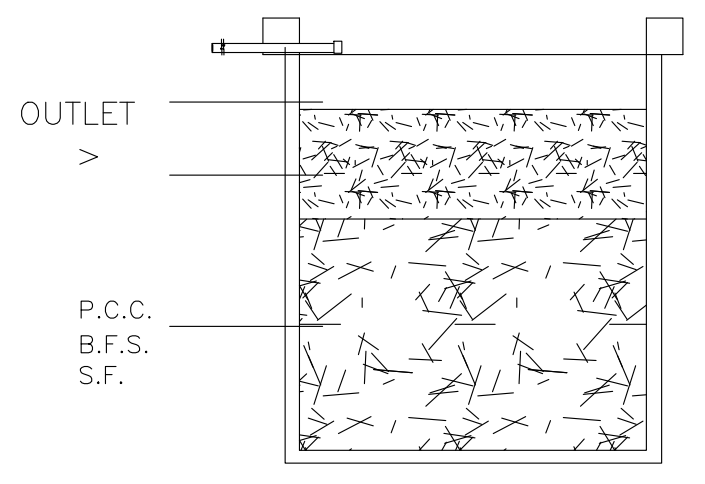
OUTLET
P.C.C.
B.F.S.
S.F.

SECTION AT Y-Y

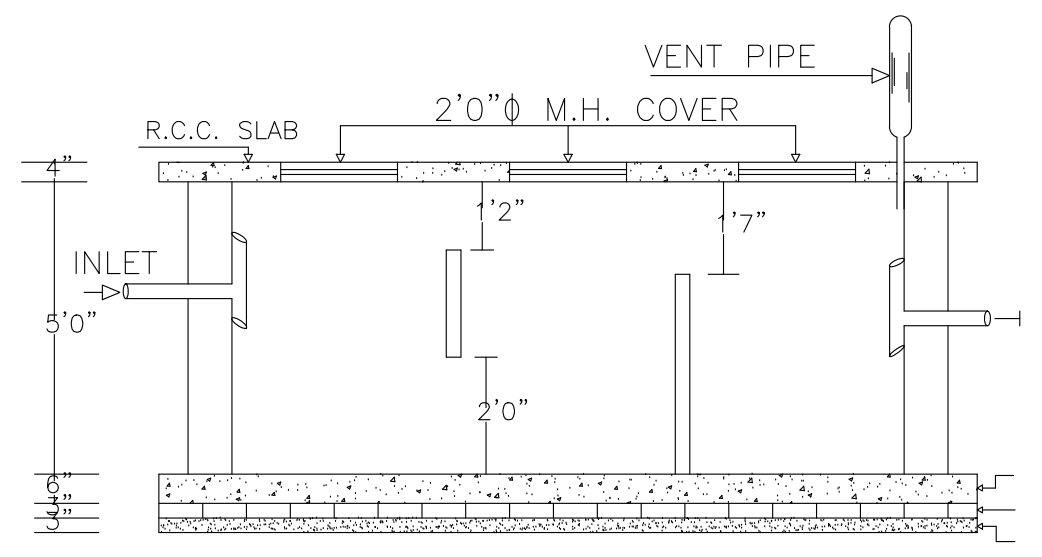
VENT PIPE
R.C.C. SLAB
2'0"Φ M.H. COVER
INLET
5'0"
2"
1'0"

SECTION OF SEPTIC TANK

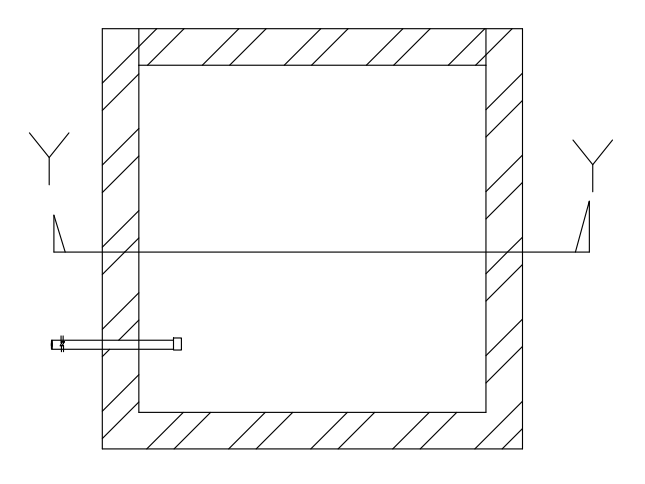

PLAN OF RECHARGE WELL

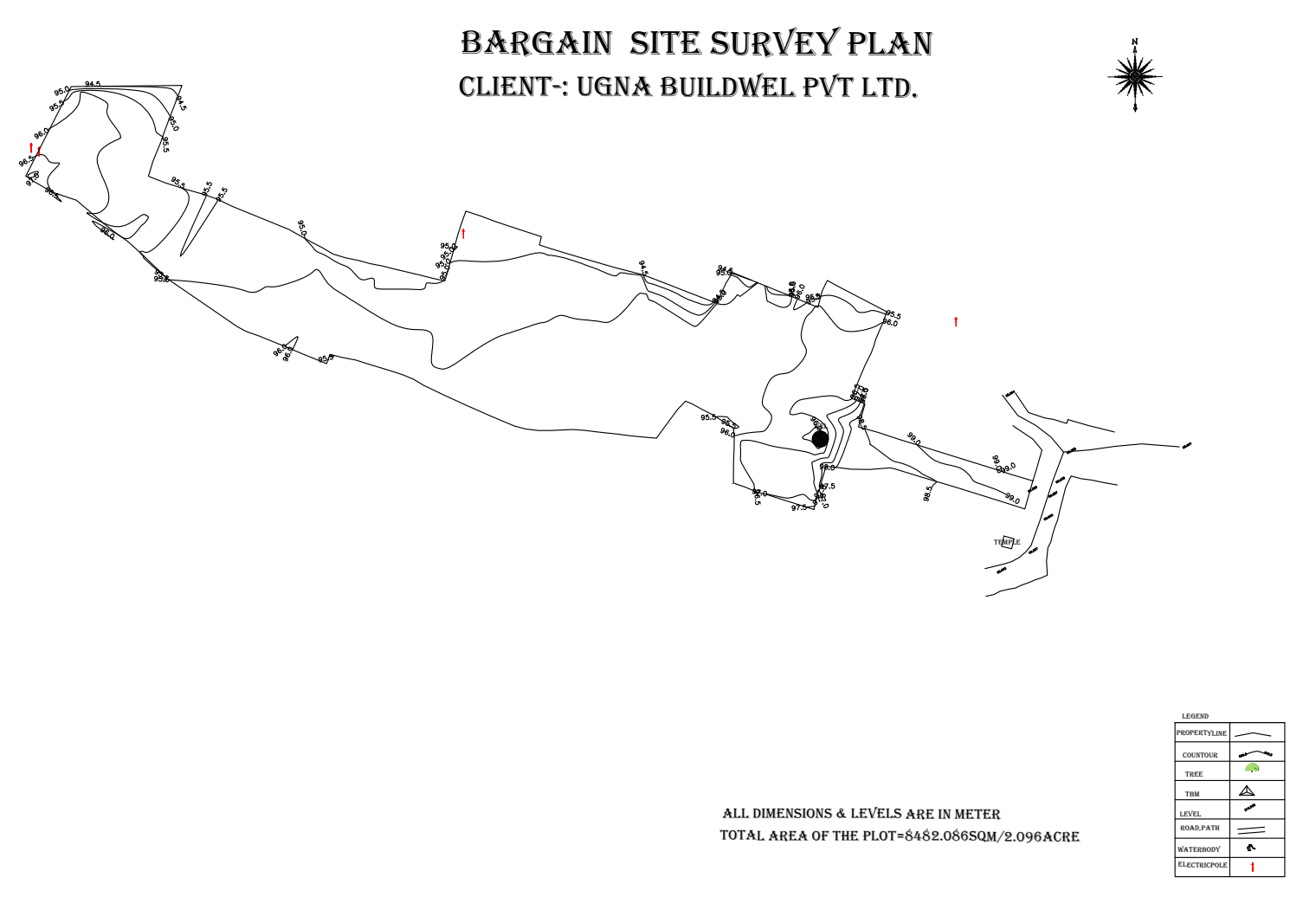
LEGEND
PROPERTYLINE
COUNTOUR
TREE
TBM
LEVEL
ROAD,PATH
WATERBODY
ELECTRICPOLE
TEMPLE

BARGAIN SITE SURVEY PLAN
CLIENT-: UGNA BUILDWEL PVT LTD.

ALL DIMENSIONS & LEVELS ARE IN METER
TOTAL AREA OF THE PLOT=8482.086SQM/2.096ACRE

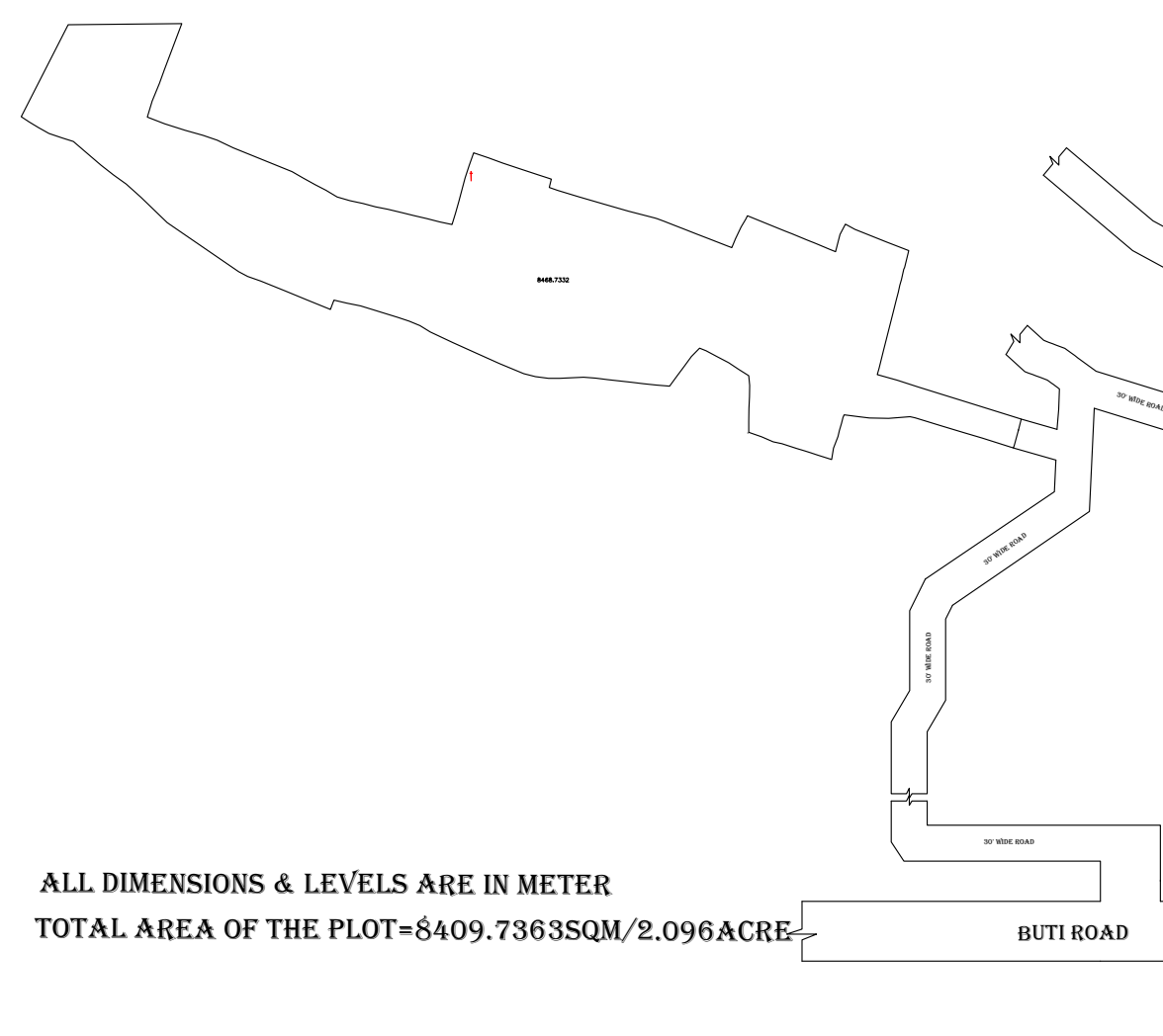
30' WIDE ROAD
30' WIDE ROAD
30' WIDE ROAD
BUTI ROAD

ALL DIMENSIONS & LEVELS ARE IN METER
TOTAL AREA OF THE PLOT=8409.7363SQM/2.096ACRE

CERTIFICATE FOR STRUCTURE SAFETY

THIS IS CERTIFY THAT THE STRUCTURAL DESIGN OF THE BUILDING WILL BE AS PER I.S.-1983-1984 & I.S.4326-1993 TO MAKE SAME EARTH QUAKE

LTP NAME AND SIGNATURE	STRUCTURAL ENG'S NAME AND SIGNATURE	BUILDER NAME AND SIGNATURE	DIGITAL SIGNATURE
MANOJ KUMAR RMC/ART/0055/15-16			Name : ARUN KUMAR Designation : Townplanner Organization :- GOVERNMENT OF

This is system generated MAP. No need to Physically Signed.

Project Title :BUILDING

DATE	20-10-2023
SHEET NO.	6
	-

Proposal Basic Information

Proposal File No.	RMC/AH/0423/W05/2022
Owner Name	UGNA Buildwell Pvt. Ltd. through Director Mr. Ajit Kumar
Khata No	117,49,03
Plot No	2381, 2386, 2387, 2388, 2389, 2413
Village Name	BADAGAAI
Use	Residential
SubUse	Low income group and EWS Housing

Building :D (BUILDING)

Floor Name	Total Built Up Area (Sq.mt.)	Deductions (Area in Sq.mt.)		Proposed FAR Area (Sq.mt.)	Add Area In FAR (Sq.mt.)	Total FAR Area (Sq.mt.)	Total Consumed Additional FAR Area (Sq.mt.)	Tnmt (No.)
		Accessory Use	Parking	Assembly	Stair			
Ground And Parking Floor	239.31	0.00	226.38	0.00	12.93	12.93	12.93	00
First Floor	239.31	0.00	0.00	239.31	0.00	239.31	239.31	01
Second Floor	234.11	0.00	0.00	234.11	0.00	234.11	234.11	01
Terrace Floor	32.99	32.99	0.00	0.00	0.00	0.00	0.00	00
Total :	745.72	32.99	226.38	473.42	12.93	486.35	486.35	02
Total Number of Same Buildings :	1							
Total :	745.72	32.99	226.38	473.42	12.93	486.35	486.35	02

SCHEDULE OF DOOR:

BUILDING NAME	NAME	LENGTH	HEIGHT	NOS
D (BUILDING)	D5	0.76	2.10	11
D (BUILDING)	D3	0.99	2.10	09
D (BUILDING)	D1	1.20	2.10	03

SCHEDULE OF WINDOW/VENTILATION:

BUILDING NAME	NAME	LENGTH	HEIGHT	NOS
D (BUILDING)	V	0.60	1.20	09
D (BUILDING)	W5	0.90	1.20	02
D (BUILDING)	W2	1.50	1.20	30

UnitBUA Table for Building :D (BUILDING)

FLOOR	Name	UnitBUA Type	UnitBUA Area	Carpet Area	No. of Rooms	No. of Tenement
FIRST FLOOR PLAN	1	OTHER	215.81	215.48	9	1
SECOND FLOOR PLAN	2	OTHER	210.76	210.44	17	1
Total:	-	-	426.57	425.92	26	2

CERTIFICATE FOR STRUCTURE SAFETY

THIS IS CERTIFY THAT THE STRUCTURAL DESIGN OF THE BUILDING WILL BE AS PER I.S-1983-1984 & I.S.4326-1993 TO MAKE SAME EARTH QUAKE

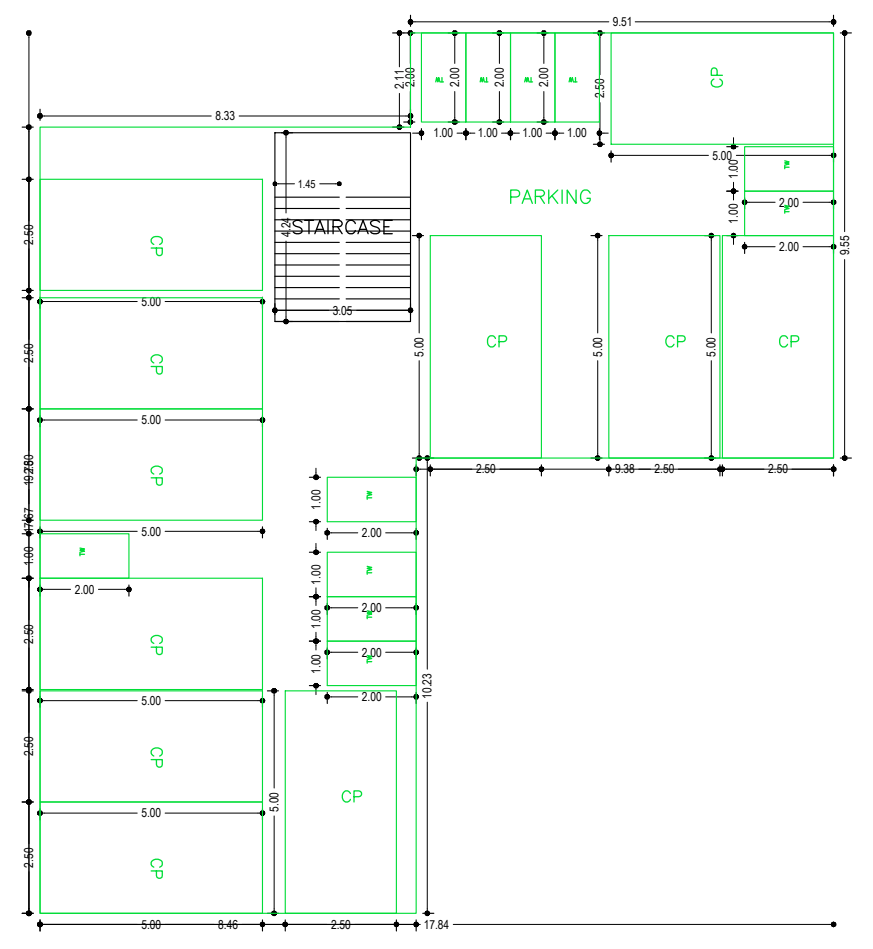
PARKING
STAIRCASE
CP
9.51
8.33
9.55
17.84

GROUND AND PARKING FLOOR PLAN
(SCALE 1:100)

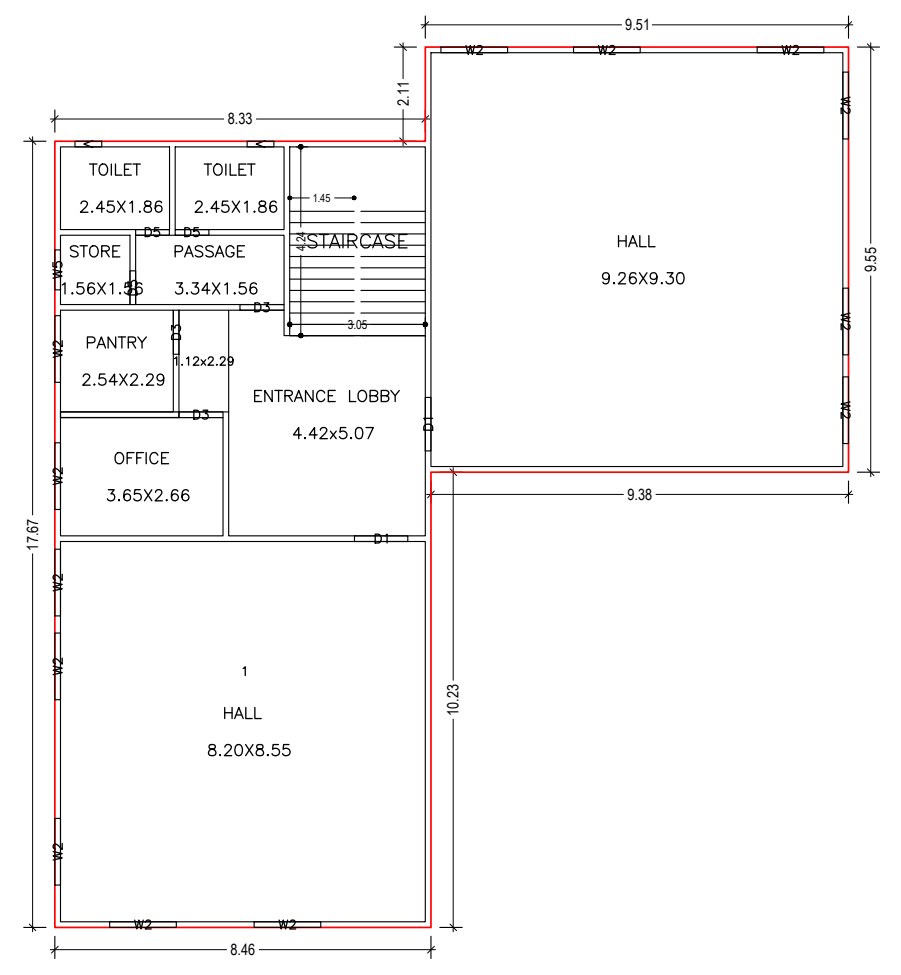
TOILET 2.45X1.86
TOILET 2.45X1.86
STAIRCASE
HALL 9.26X9.30
STORE 1.56X1.56
PASSAGE 3.34X1.56
PANTRY 2.54X2.29
ENTRANCE LOBBY 4.42x5.07
OFFICE 3.65X2.66
HALL 8.20X8.55
9.51
8.33
9.38
8.46
17.67
10.23

FIRST FLOOR PLAN
(Proposed)
(SCALE 1:100)

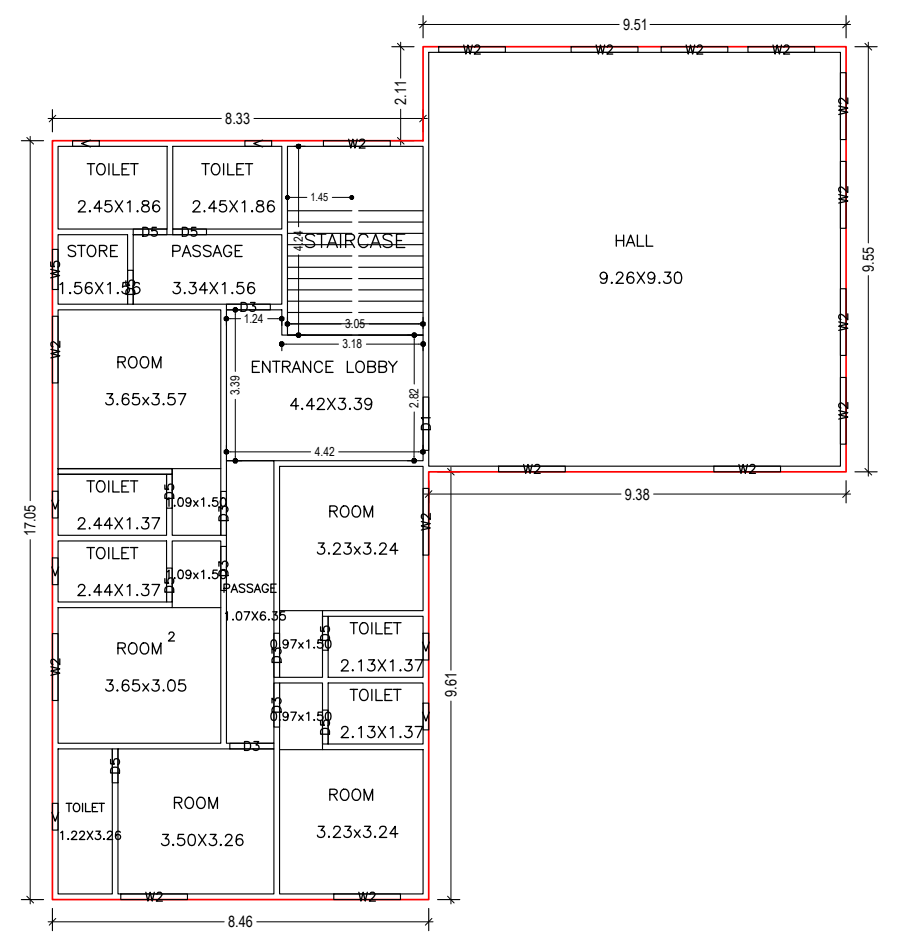
TOILET 2.45X1.86
TOILET 2.45X1.86
STAIRCASE
HALL 9.26X9.30
STORE 1.56X1.56
PASSAGE 3.34X1.56
ROOM 3.65x3.57
ENTRANCE LOBBY 4.42X3.39
TOILET 2.44X1.37
TOILET 2.44X1.37
ROOM 3.23x3.24
ROOM 3.65x3.05
PASSAGE 1.07X6.35
TOILET 2.13X1.37
TOILET 2.13X1.37
TOILET 1.22X3.26
ROOM 3.50X3.26
ROOM 3.23x3.24
9.51
8.33
9.38
8.46
17.05
9.61

SECOND FLOOR PLAN
(Proposed)
(SCALE 1:100)

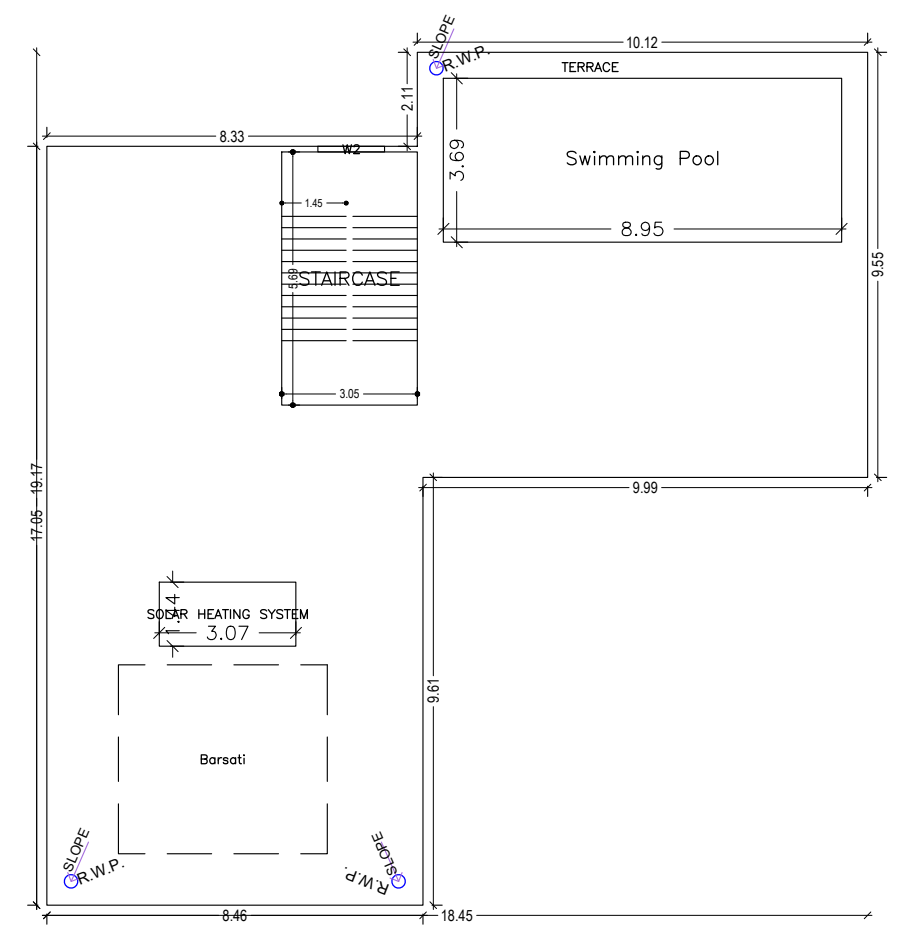
TERRACE
Swimming Pool
3.69
8.95
STAIRCASE
SOLAR HEATING SYSTEM
3.07
Barsati
SLOPE
R.W.P.
10.12
8.33
9.55
9.99
9.61
8.46
18.45

TERRACE FLOOR PLAN
(SCALE 1:100)

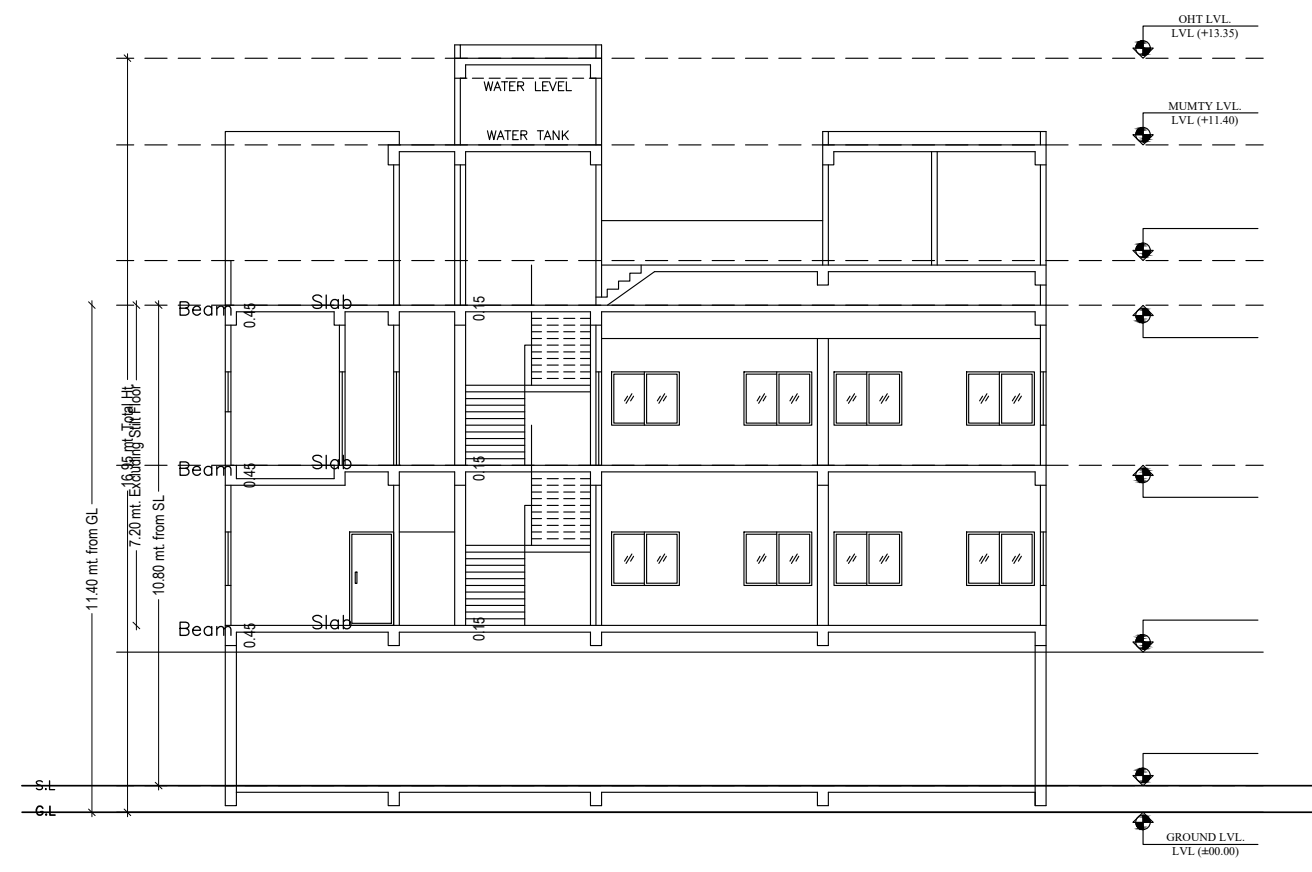

SECTION AA
SCALE - 1:100

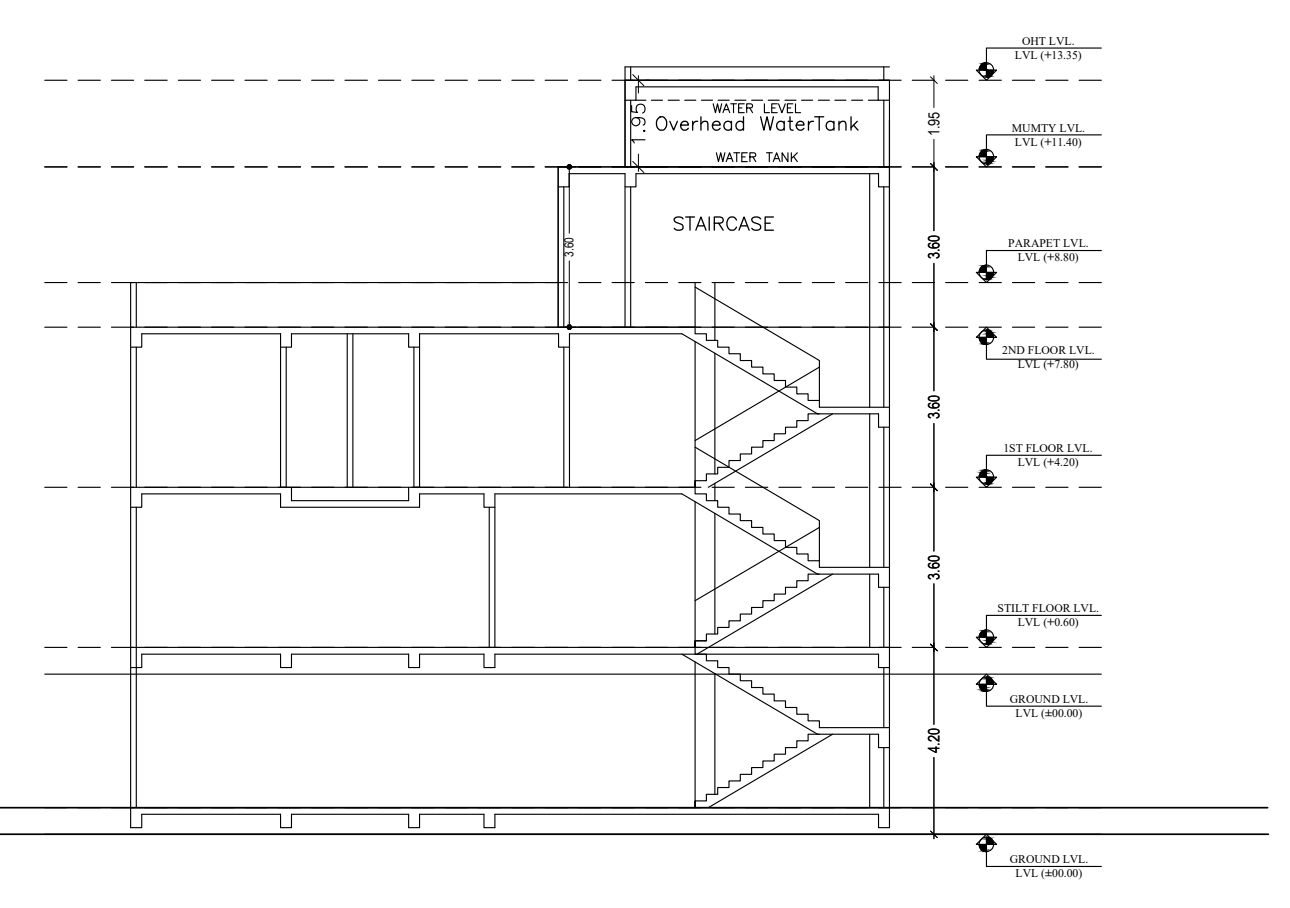
Overhead WaterTank
WATER TANK
STAIRCASE

SECTION BB
SCALE - 1:100

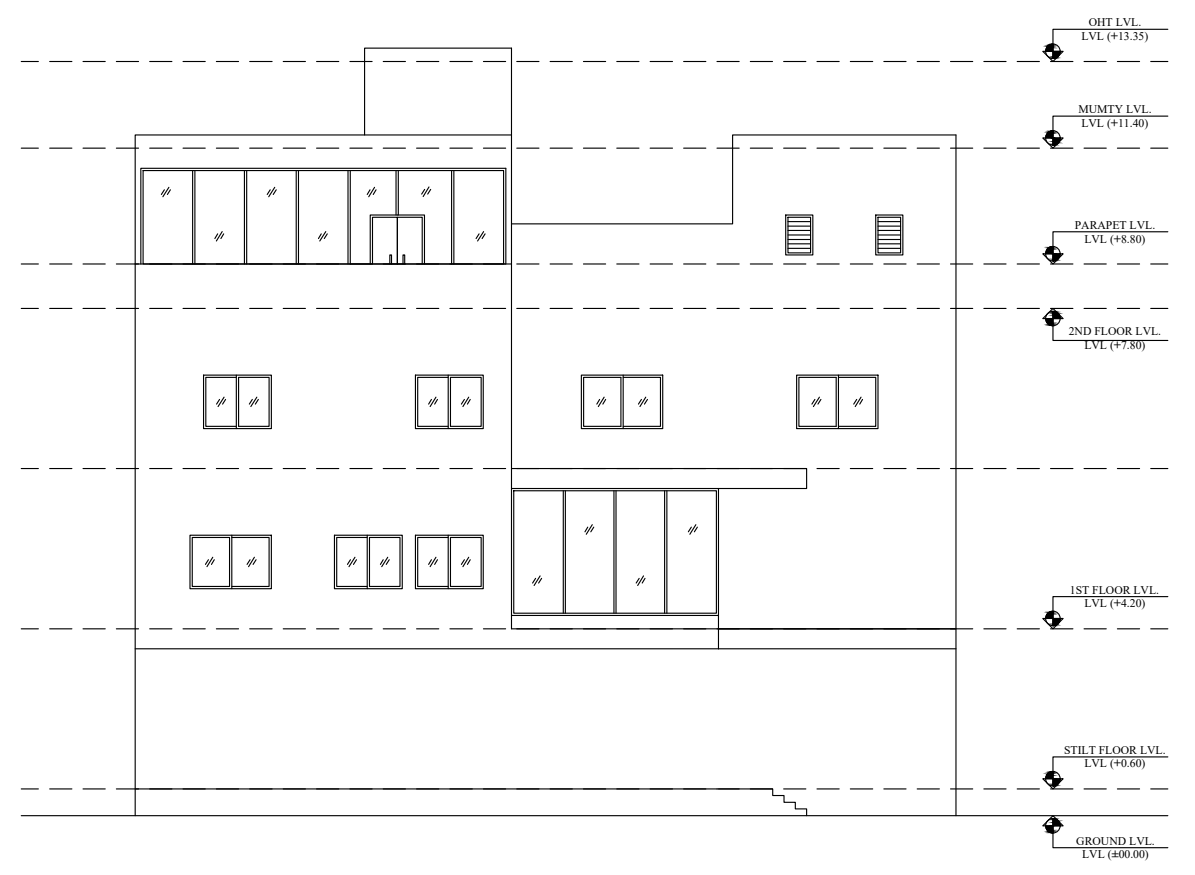

FRONT ELEVATION
SCALE - 1:100

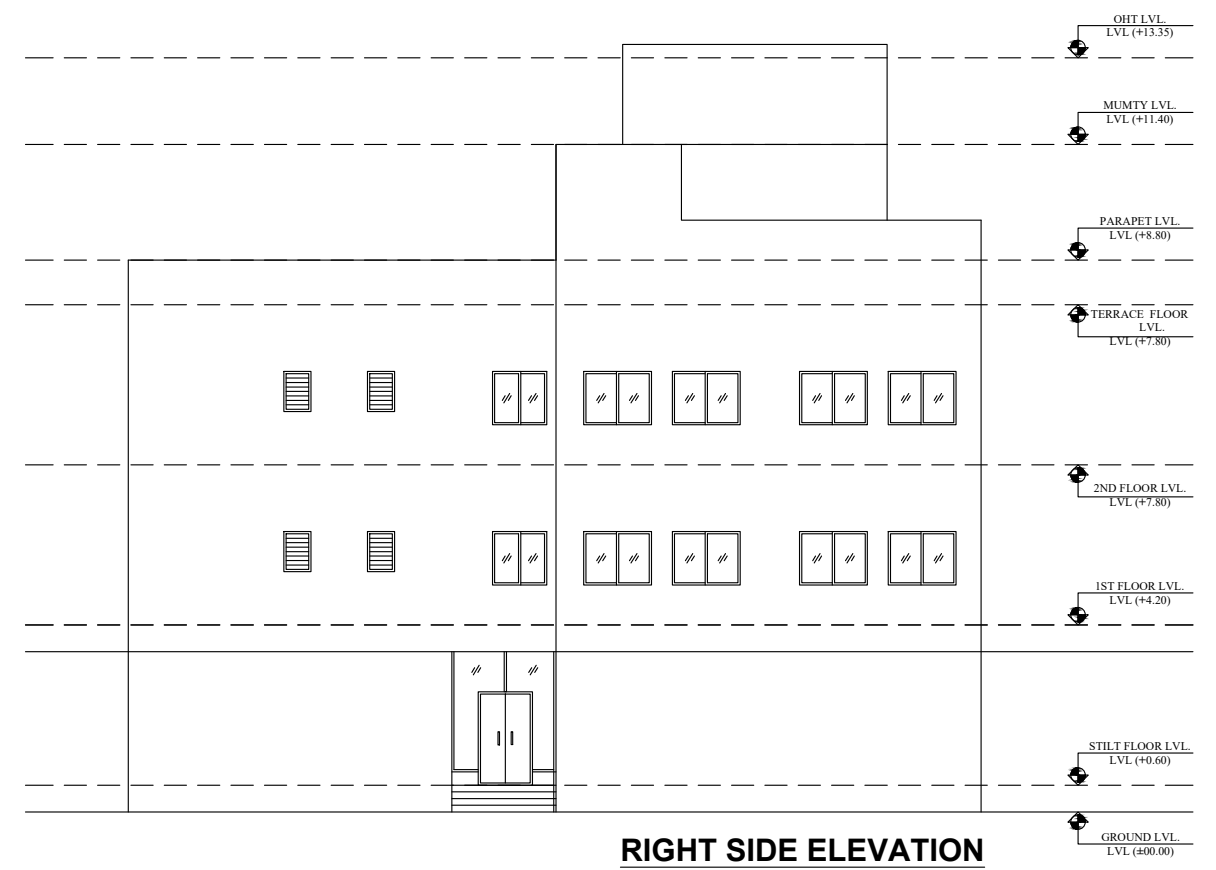

RIGHT SIDE ELEVATION
SCALE - 1:100

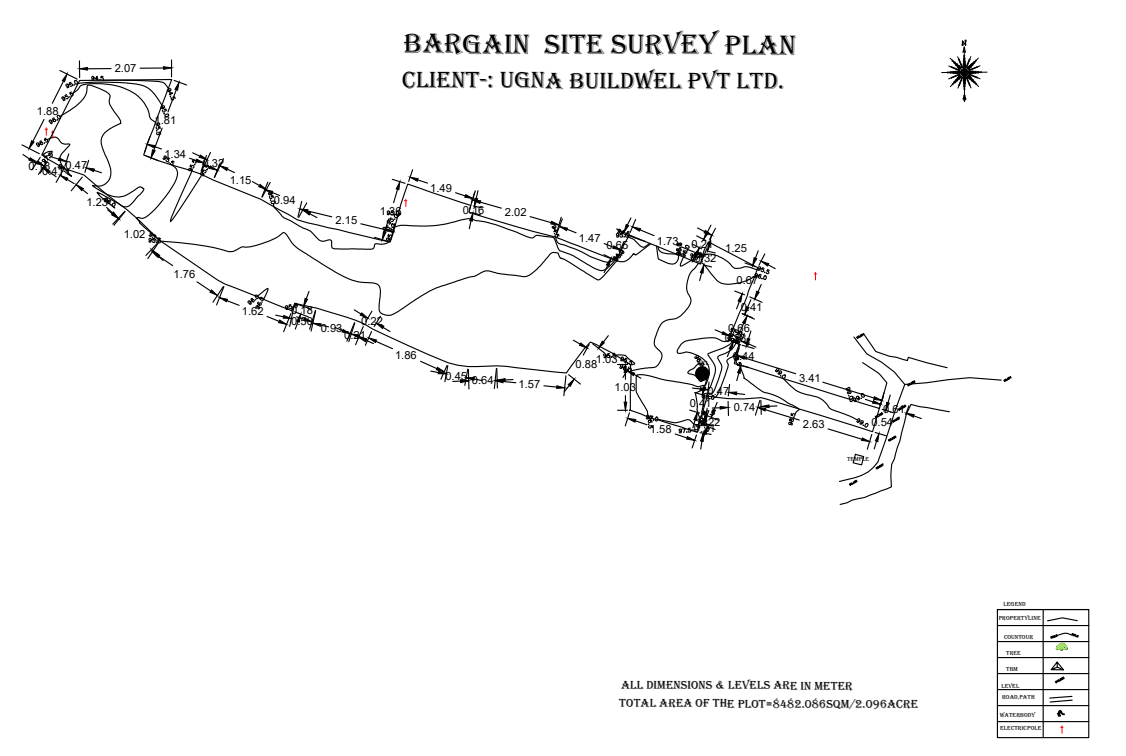
BARGAIN SITE SURVEY PLAN
CLIENT-: UGNA BUILDWEL PVT LTD.
ALL DIMENSIONS & LEVELS ARE IN METER
TOTAL AREA OF THE PLOT=8482.086SQM/2.096ACRE

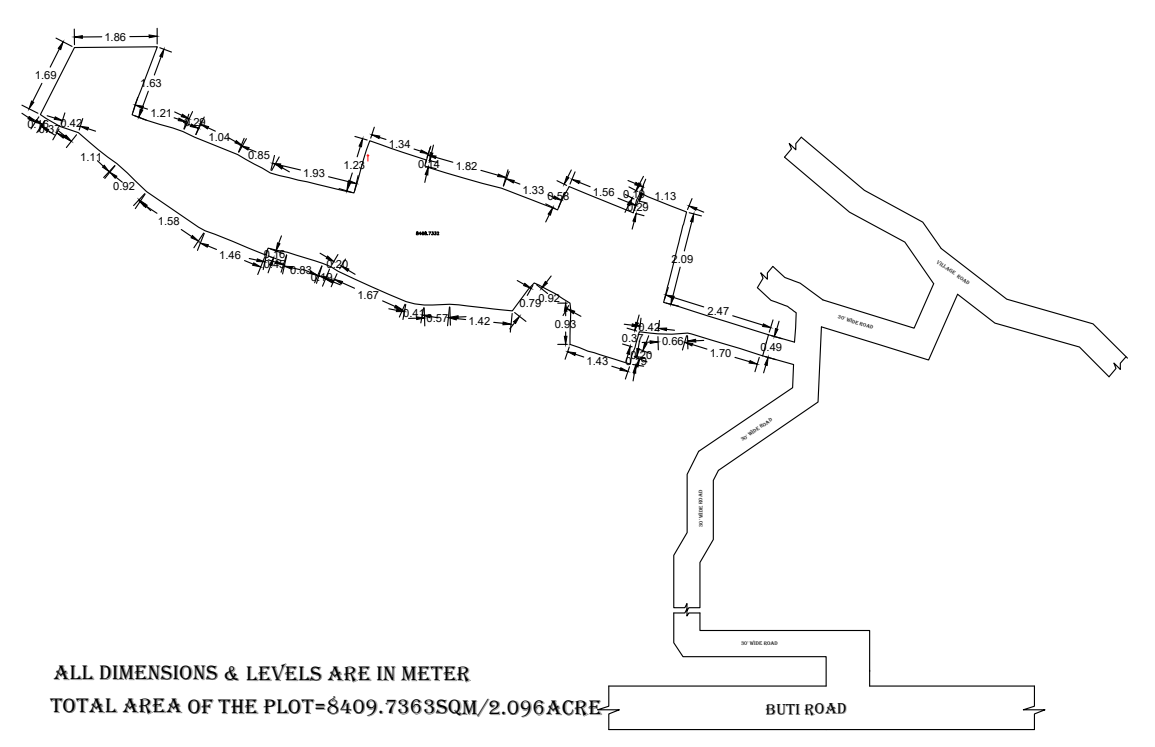

ALL DIMENSIONS & LEVELS ARE IN METER
TOTAL AREA OF THE PLOT=8409.7363SQM/2.096ACRE

OUTLET

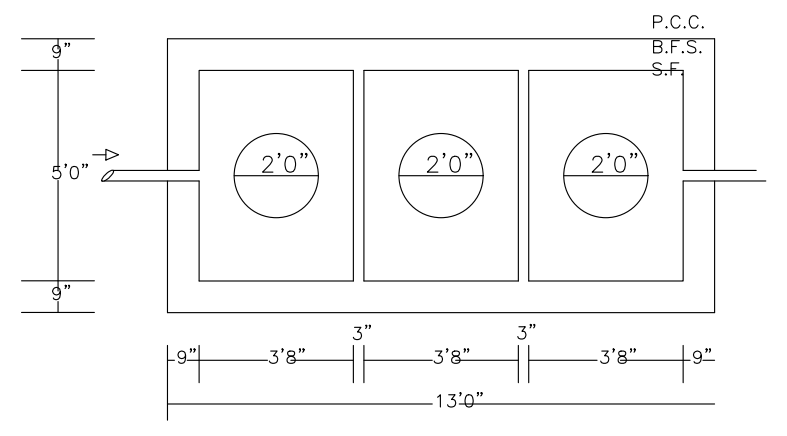
P.C.C.
B.F.S.
S.F.
2'0"
9"
5'0"
3'8"
3"
13'0"

PLAN OF SEPTIC TANK
SCALE:- 1" = 4' - 0"

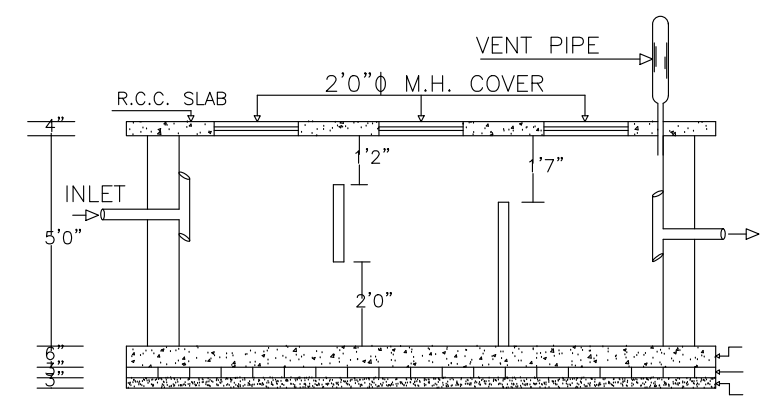
VENT PIPE
R.C.C. SLAB
2'0"ϕ M.H. COVER
INLET
4"
5'0"
1'2"
1'7"
2'0"
6"
3"

SECTION OF SEPTIC TANK

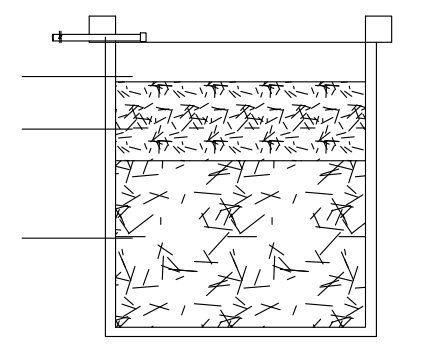

SECTION AT Y-Y

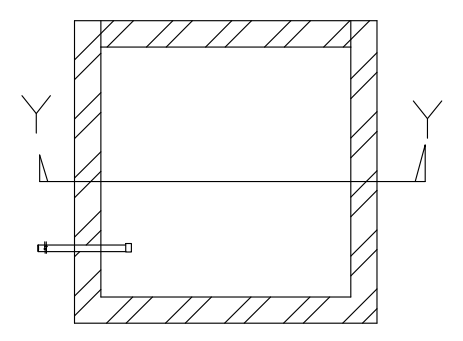

PLAN OF RECHARGE WELL

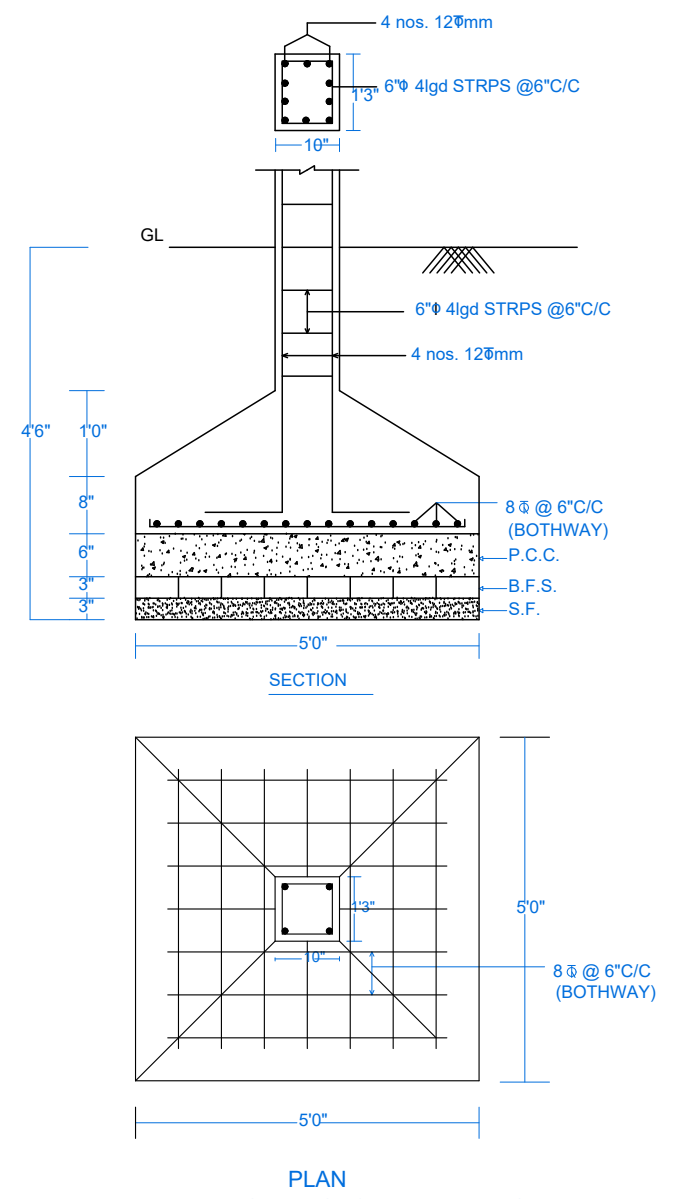
4 nos. 12ϕmm
6"ϕ 4lgd STRPS @6"C/C
1'3"
10"
GL
4'6"
1'0"
8"
6"
3"
8 ϕ @ 6"C/C (BOTHWAY)
P.C.C.
B.F.S.
S.F.
5'0"
SECTION

PLAN

DETAIL OF COLUMNS

SCALE:- 1" = 2' - 0"

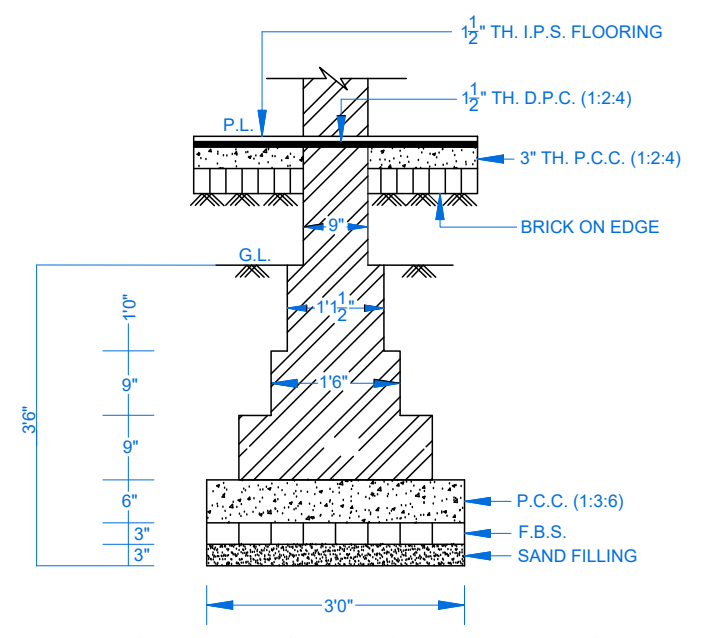
1½" TH. I.P.S. FLOORING
1½" TH. D.P.C. (1:2:4)
3" TH. P.C.C. (1:2:4)
BRICK ON EDGE
P.L.
G.L.
9"
1'1½"
1'6"
3'6"
1'0"
6"
3"
P.C.C. (1:3:6)
F.B.S.
SAND FILLING
3'0"

-:DETAIL OF BRICK FOUNDATION:-

SCALE:- 1" = 2' - 0"

LTP NAME AND SIGNATURE	STRUCTURAL ENG'S NAME AND SIGNATURE	BUILDER NAME AND SIGNATURE	DIGITAL SIGNATURE
MANOJ KUMAR RMC/ART/0055/15-16			

Name : ARUN KUMAR
Designation : Townplanner
Organization :
GOVERNMENT OF

This is system generated MAP. No need to Physically Signed.

ISO_full_bleed_4A0_(1682.00_x_2378.00_MM)