Project Title :PROPOSED B+G+4 BUILDING

DATE	24-01-2024
SHEET NO.	1

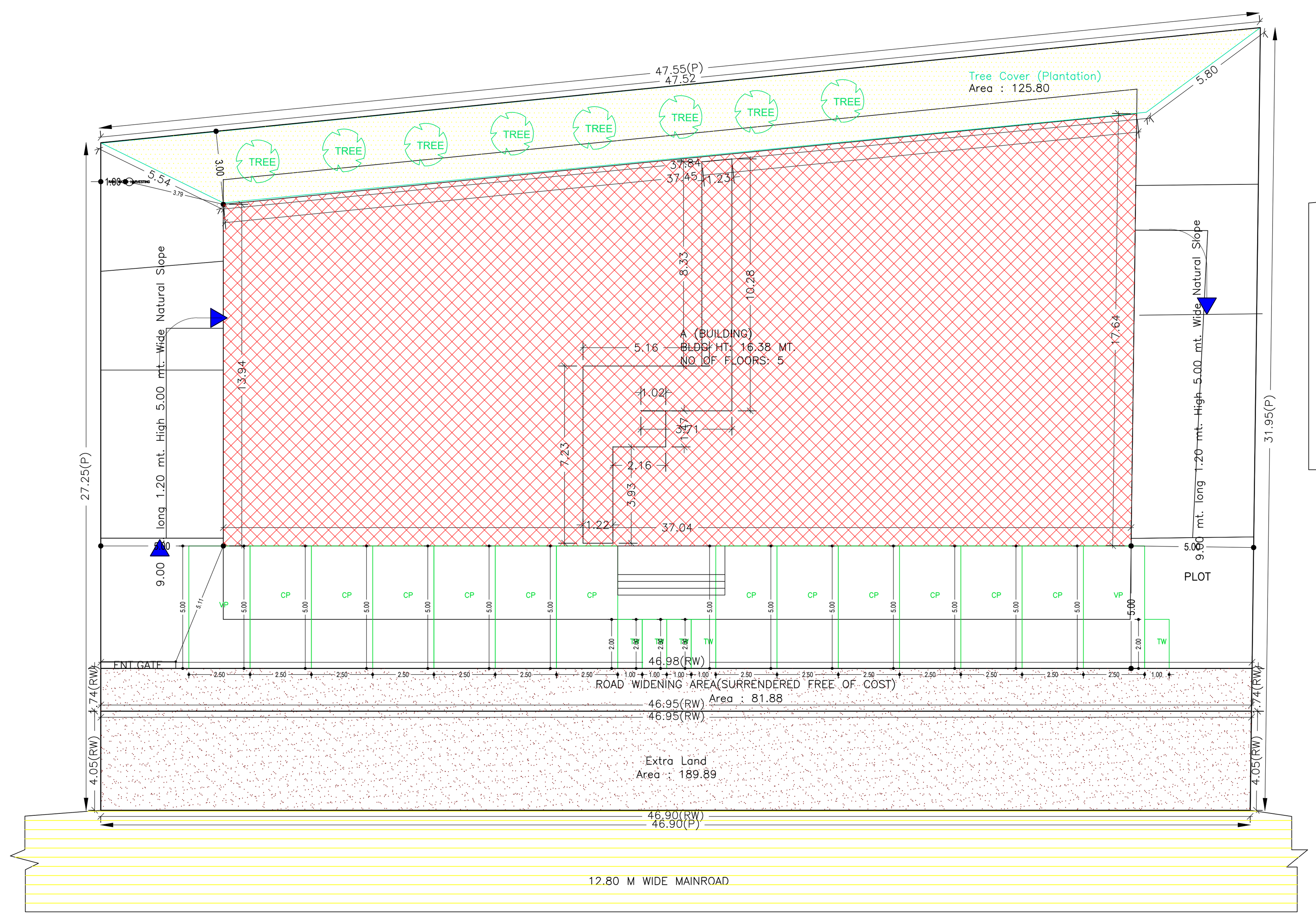

SITE PLAN

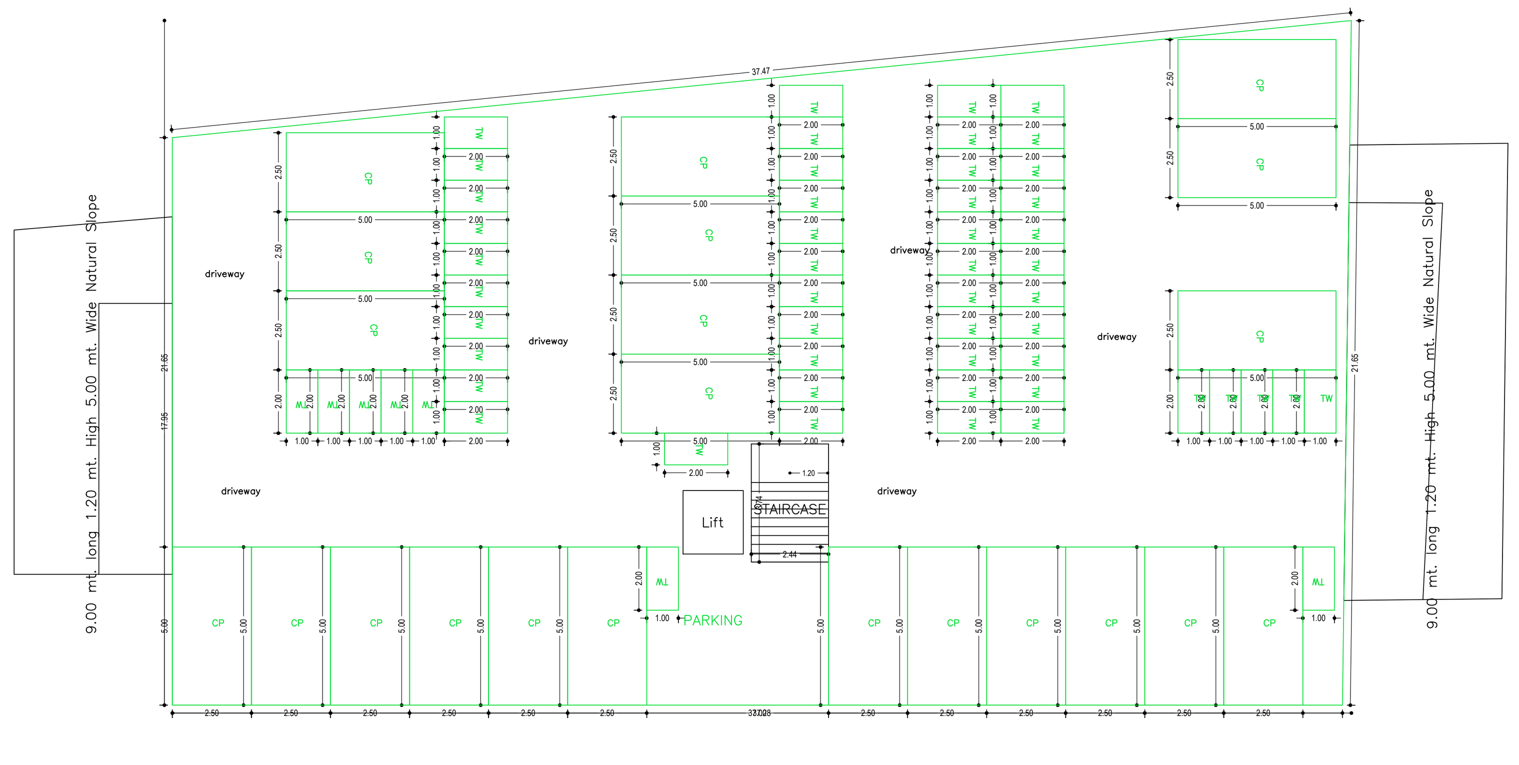

BASEMENT FLOOR PLAN
(SCALE 1:100)

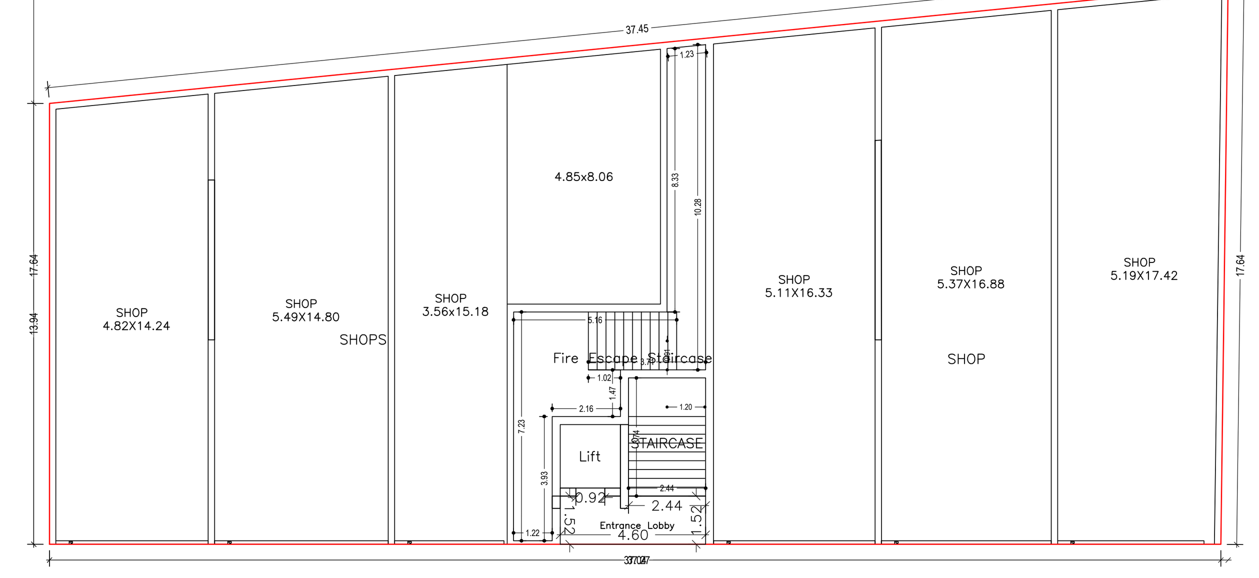

GROUND FLOOR PLAN
(Proposed)
(SCALE 1:100)

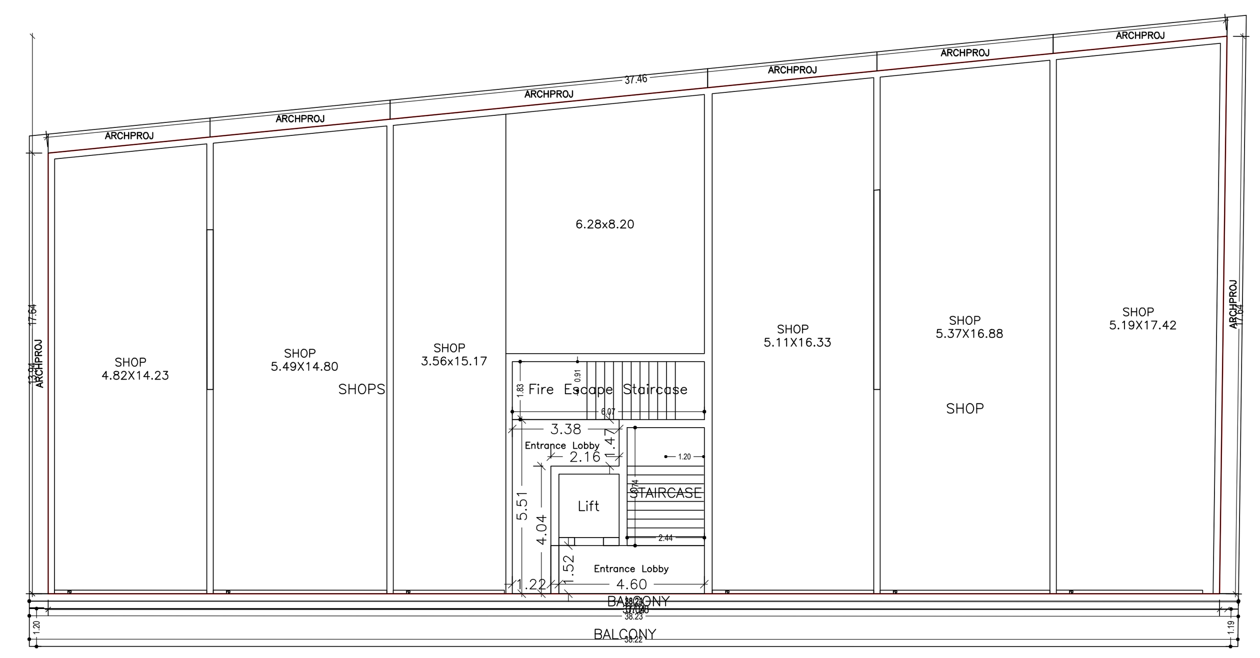

FIRST FLOOR PLAN
(Proposed)
(SCALE 1:100)

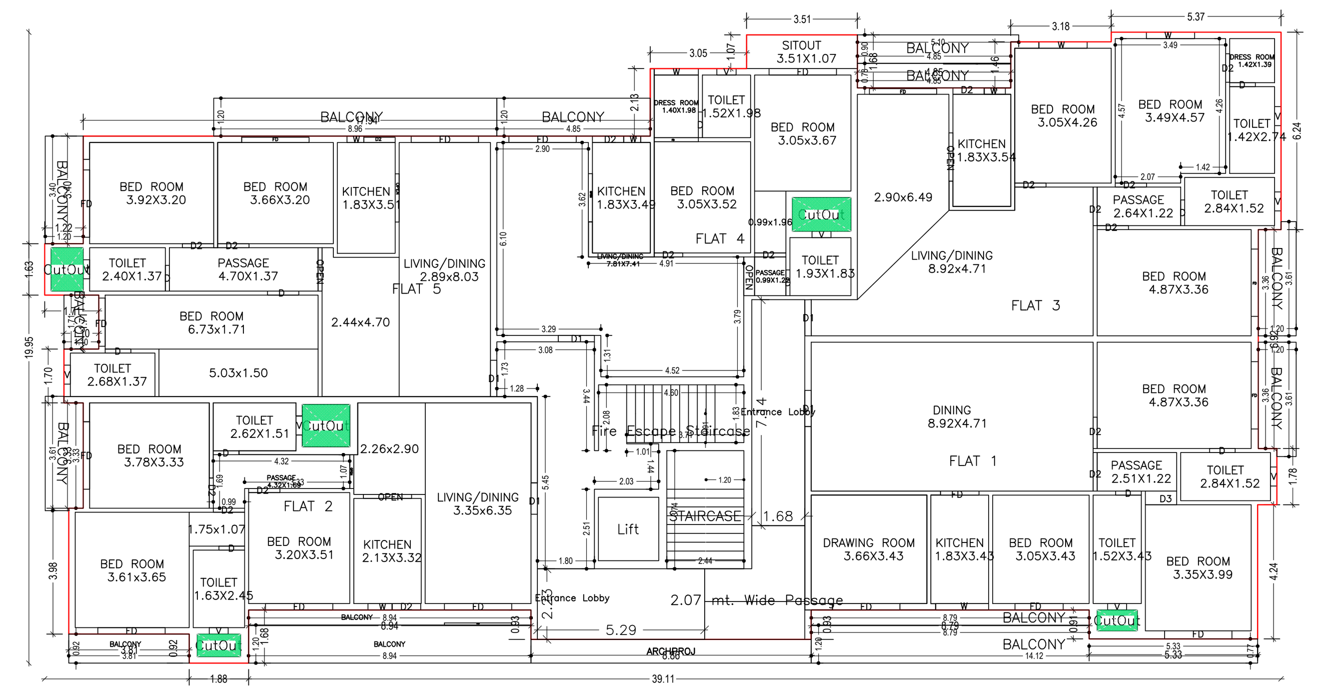

TYPICAL - 2- 4 FLOOR PLAN
(Proposed)
(SCALE 1:100)

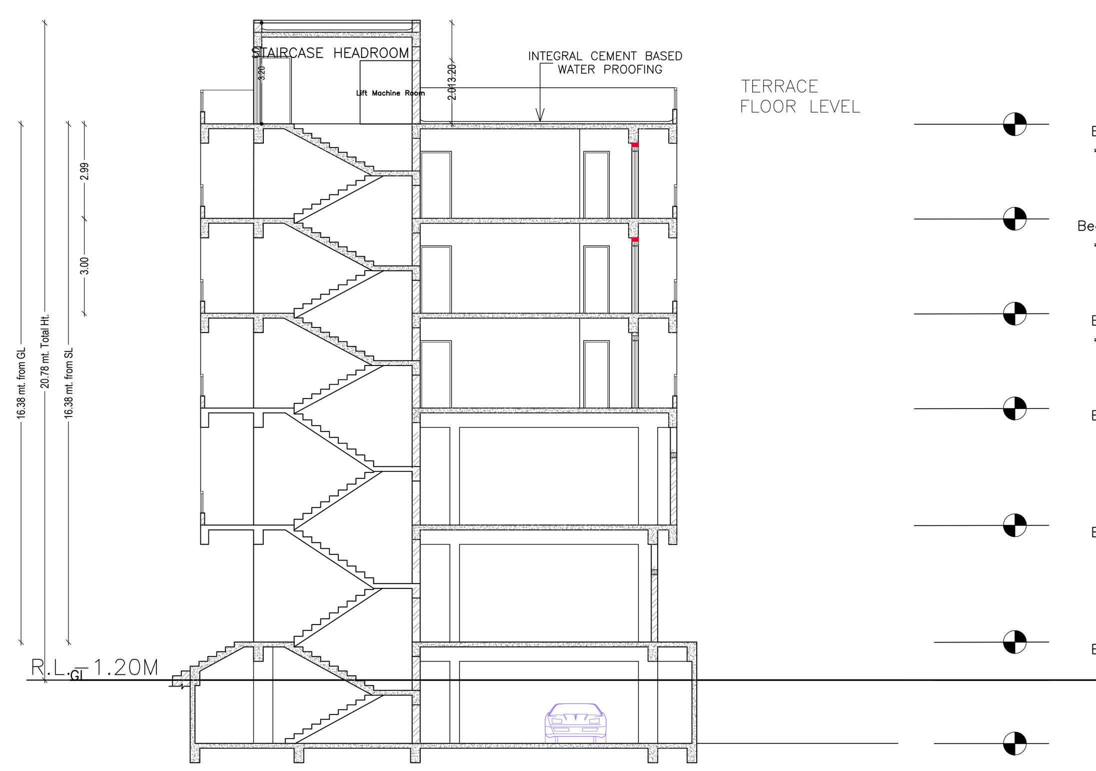

SECTION AT:-A-A'

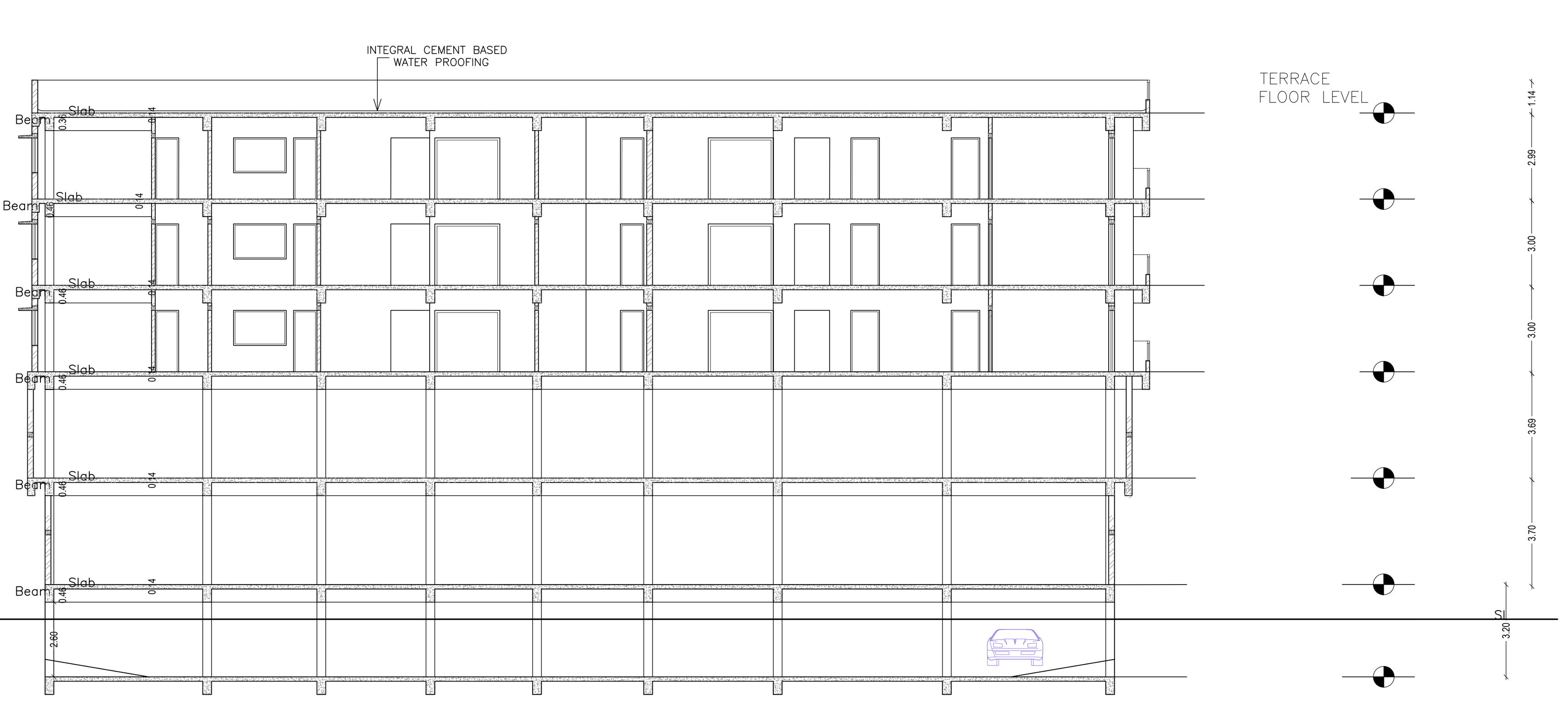

SECTION AT:-B-B'

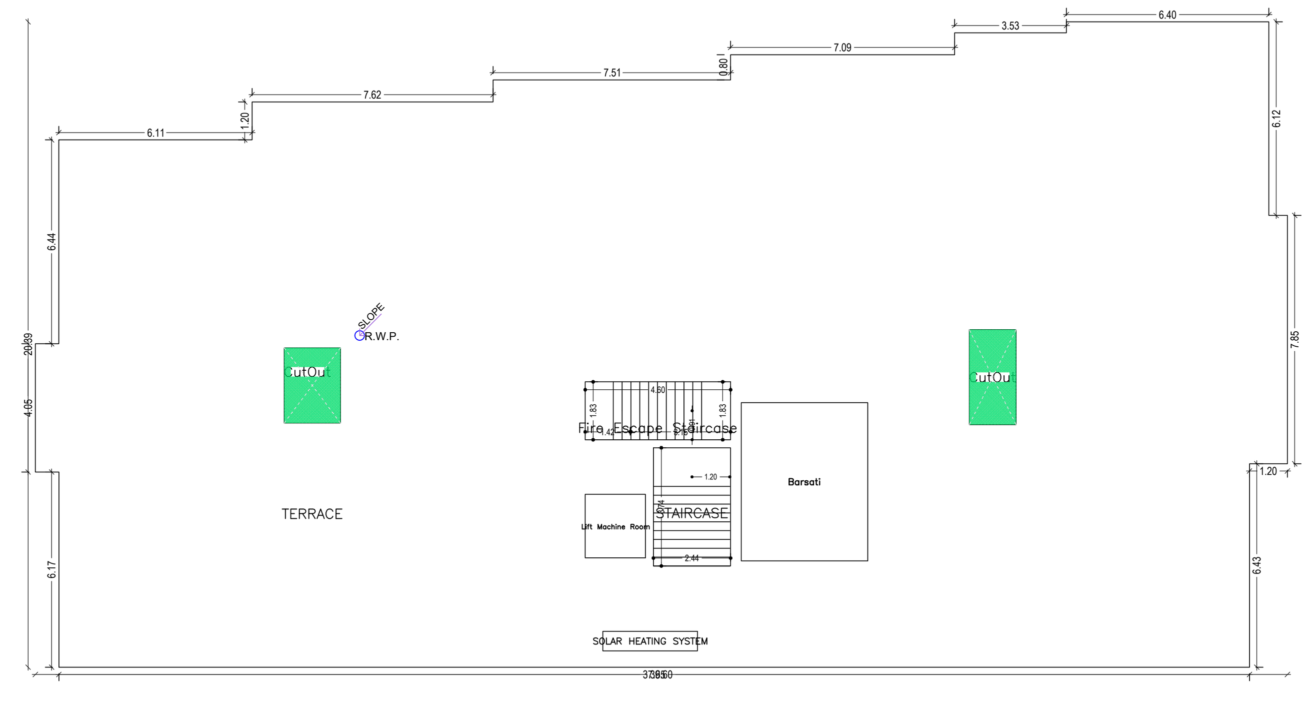

TERRACE FLOOR PLAN
(SCALE 1:100)

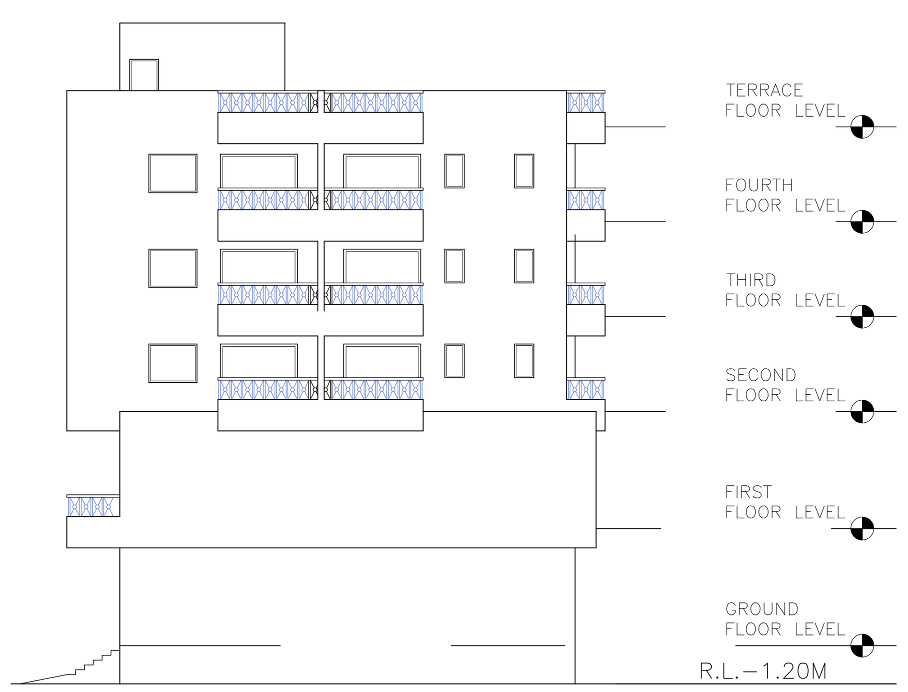

FRONT ELEVATION

FRONT ELEVATION

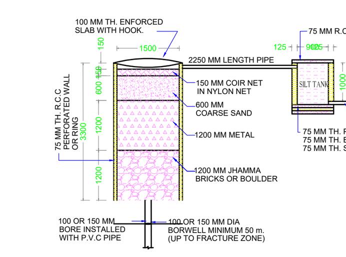

DETAIL OF GROUND WATER
RECHARGING PIT WITH SILT TANK

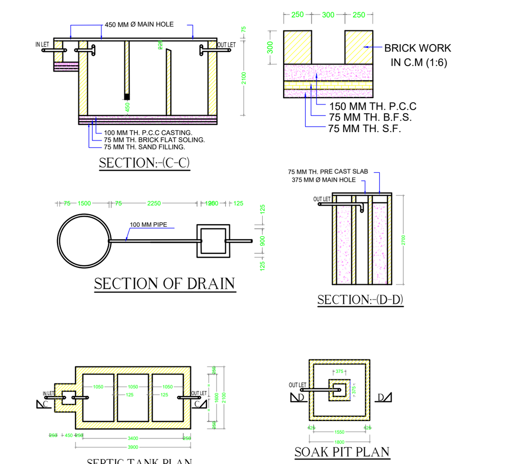

SECTION:-(C-C)
SECTION OF DRAIN
SECTION:-(D-D)
SEPTIC TANK PLAN
SOAK PIT PLAN

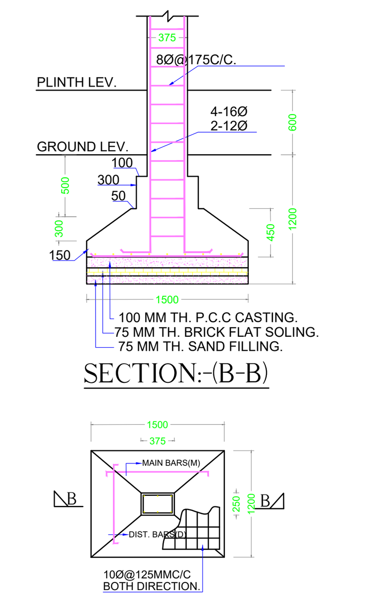

SECTION:-(B-B)
FOUNDATION PLAN
OF CLOUMN

Proposal Basic Information

Proposal File No.	RMC/BP/0743/W03/2023
Owner Name	RADHIKA MODI PRITI NARSARIA
Khata No	75
Plot No	411/F,411G
Village Name	CHIROUNDI
Use	Mixed
SubUse	Resi+Comm

AREA STATEMENT RANCHI MUNICIPAL CORPORATION	VERSION NO.: 1.0.68 VERSION DATE: 16/10/2020	
PROJECT DETAIL:		
Region: JHARKHAND URBAN LOCAL BODIES	Plot Use: Mixed	
District: RANCHI	Plot SubUse: Resi+Comm	
Authority: RANCHI MUNICIPAL CORPORATION	PlotNearbyReligiousStructure: NA	
Inward_No: RMC/BP/0743/W03/2023	Plot/SubPlot No: 411/F,411G	
Application Type: General Proposal	North: -	
Project Type: Building Permission	South: -	
Nature of Development: New	East: -	
Location of Development Area: Old Area	West: -	
AREA DETAILS:		SQ.MT.
AREA OF PLOT (Minimum)	(A)	1203.97
Deduction for NetPlot Area		
Surrender Free of Cost		81.88
Total		81.88
NET AREA OF PLOT(Gross Plot Area - Deduction from Gross Plot area)	(A-Deductions)	1122.09
Deduction for Balance Plot Area(from Gross Plot Area)		
Surrender Free of Cost		81.88
Common Plot		125.80
Total		207.69
BALANCE AREA OF PLOT(Net Plot Area - Recreational/Amenity space)	(A-Deductions)	996.28
PLOT AREA FOR COVERAGE(Net Plot Area)	(A-Deductions)	1122.09
Plot Area for FAR (Net Plot Area + RoadWidening Area)	(A-Deductions)	1203.97
COVERAGE CHECK		
Permissible Coverage area (50.00 %)		561.04
Proposed Coverage Area (49.50 %)		555.40
Total Prop. Coverage Area (49.5 %)		555.40
Balance coverage area (0.50 %)		5.64
FAR CHECK		
Perm. FAR Area (2.500)		3009.92
Total Perm. FAR area		3009.92
Residential FAR		1842.67
Commercial FAR		1112.17
Proposed FAR Area		3009.57
Total Proposed FAR Area		3009.57
Consumed FAR (Factor)		2.50
Balance FAR Area		0.35
BUILT UP AREA CHECK		
Total Proposed BuiltUp Area		4120.83
ARCHITECT (Regd)		RAJIV CHADDA
ENGGINEER (Regd)		
SUPERVISOR (Regd)		
OWNER (Regd)		RADHIKA MODI PRITI NARSARIA
DEVELOPMENT AUTHORITY		LOCAL BODY

COLOR INDEX

- PLOT BOUNDARY
- ABUTTING ROAD
- PROPOSED CONSTRUCTION
- COMMON PLOT
- ROAD WIDENING AREA
- EXISTING (To be retained)
- EXISTING (To be demolished)

Buildingwise Floor FAR Details

Floor Name	Building Name A (BUILDING) Proposed Built Up Area (Sq.mt.)	A (BUILDING) Proposed FAR Area (Sq.mt.)	Total Proposed Built Up Area (Sq.mt.)	Total FAR Area (Sq.mt.)
Basement Floor	735.06	9.12	735.06	9.12
Ground Floor	586.53	548.26	586.53	548.26
First Floor	673.35	609.52	673.35	609.52
Second Floor	708.63	614.22	708.63	614.22
Third Floor	708.63	614.22	708.63	614.22
Fourth Floor	708.63	614.22	708.63	614.22
Terrace Floor	0.00	0.00	0.00	0.00
Total :	4120.83	3009.56	4120.83	3009.56

Building USE/SUBUSE Details

Building Name	Building Use	Building SubUse	Building Structure
A (BUILDING)	Residential	ResiComm Bldg	Non-Highrise

Required Parking(Table 7a)

Building Name	Type	SubUse	Area (Sq.mt.)	Units Reqd.	Units Prop.	Car Reqd./Unit	Car Reqd.	Car Prop.	Visitors Car Reqd./Unit	Visitors Car Reqd.	Visitors Car Prop.	TwoWheeler Reqd./Unit	TwoWheeler Reqd.	TwoWheeler Prop.
A (BUILDING)	Commercial	Shop	> 0	50	1090.11	1	15	-	-	-	-	-	-	-
			> 0	50	1090.11	-	-	-	-	-	-	1	46	-
	Residential	ResiComm Bldg	0 - 140	1	12.00	1.00	12	-	-	-	-	-	-	-
			> 140	1.5	-	1	4.5	-	-	-	-	-	-	-
			> 0	1	15.00	-	-	-	-	-	-	1	15	-
			> 0	1	15.00	-	-	-	1	2	-	-	-	-
	Total :		-	-	-	-	32	34	-	2	2	-	61	61

Parking Check (Table 7b)

Vehicle Type	Reqd. No.	Reqd. Area	Prop. No.	Prop. Area
Car	-	-	34	425.00
Total Car	32	400.00	34	425.00
Visitor's Car Parking	-	-	2	25.00
Total Visitor Parking	2	25.00	2	25.00
TwoWheeler	-	-	61	122.00
Total TwoWheeler	61	122.00	61	122.00
Other Parking	-	-	-	335.12
Total	547.00		1029.12	

FAR & Tenement Details (Table 4c-1)

Building	No. of Same Bldg	Gross Built Up Area (Sq.mt.)	Deductions From Gross BUA(Area in Sq.mt.) Cutout	Total Built Up Area (Sq.mt.)	Deductions (Area in Sq.mt.) StairCase	Lift	Balcony	Accessory Use	Parking	Proposed FAR Area (Sq.mt.) Resi.	Commercial	Add Area In FAR (Sq.mt.) Stair	Balcony	Total FAR Area (Sq.mt.)	Total Consumed Additional FAR Area (Sq.mt.)	Tnmt (No.)
A (BUILDING)	1	4142.40	21.57	4120.83	121.72	19.15	152.88	95.41	722.12	1842.66	1112.17	9.12	22.81	3009.56	3009.56	19
Grand Total :	1	4142.40	21.57	4120.83	121.72	19.15	152.88	95.41	722.12	1842.66	1112.17	9.12	22.81	3009.56	3009.56	19

Building :A (BUILDING)

Floor Name	Gross Builtup Area	Deductions From Gross BUA(Area in Sq.mt.) Cutout	Total Built Up Area (Sq.mt.)	Deductions (Area in Sq.mt.) StairCase	Lift	Balcony	Accessory Use	Parking	Proposed FAR Area (Sq.mt.) Resi.	Commercial	Add Area In FAR (Sq.mt.) Stair	Balcony	Total FAR Area (Sq.mt.)	Total Consumed Additional FAR Area (Sq.mt.)	Tnmt (No.)
Basement Floor	735.06	0.00	735.06	0.00	3.83	0.00	0.00	722.12	0.00	0.00	9.12	0.00	9.12	9.12	00
Ground Floor	586.53	0.00	586.53	31.13	0.00	0.00	7.14	0.00	0.00	548.26	0.00	0.00	548.26	548.26	02
First Floor	673.35	0.00	673.35	11.12	3.83	31.98	16.90	0.00	0.00	563.91	0.00	22.81	609.52	609.52	02
Second Floor	715.82	7.19	708.63	26.49	3.83	40.30	23.79	0.00	614.22	0.00	0.00	0.00	614.22	614.22	05
Third Floor	715.82	7.19	708.63	26.49	3.83	40.30	23.79	0.00	614.22	0.00	0.00	0.00	614.22	614.22	05
Fourth Floor	715.82	7.19	708.63	26.49	3.83	40.30	23.79	0.00	614.22	0.00	0.00	0.00	614.22	614.22	05
Terrace Floor	0.00	0.00	0.00	0.00	0.00	0.00	0.00	0.00	0.00	0.00	0.00	0.00	0.00	0.00	00
Total :	4142.40	21.57	4120.83	121.72	19.15	152.88	95.41	722.12	1842.66	1112.17	9.12	22.81	3009.56	3009.56	19
Total Number of Same Buildings :	1														
Total :	4142.40	21.57	4120.83	121.72	19.15	152.88	95.41	722.12	1842.66	1112.17	9.12	22.81	3009.56	3009.56	19

SCHEDULE OF DOOR:

BUILDING NAME	NAME	LENGTH	HEIGHT	NOS
A (BUILDING)	D	0.81	2.10	30
A (BUILDING)	D2	0.90	2.10	09
A (BUILDING)	D2	0.95	2.10	03
A (BUILDING)	D2	0.99	2.10	36
A (BUILDING)	D	0.99	2.10	03
A (BUILDING)	D3	0.99	2.10	03
A (BUILDING)	D1	0.99	2.10	03
A (BUILDING)	OPEN	1.07	2.10	03
A (BUILDING)	D1	1.14	2.10	12
A (BUILDING)	OPEN	1.22	2.10	03
A (BUILDING)	D2	1.22	2.10	06
A (BUILDING)	FD	1.22	2.10	03
A (BUILDING)	OPEN	1.37	2.10	03
A (BUILDING)	FD	1.40	2.10	03
A (BUILDING)	OPEN	1.52	2.10	12
A (BUILDING)	FD	1.52	2.10	06
A (BUILDING)	FD	2.13	2.10	42
A (BUILDING)	FD	3.46	2.10	01
A (BUILDING)	FD	3.52	2.10	01
A (BUILDING)	FD	4.63	2.10	02
A (BUILDING)	FD	4.82	2.10	02
A (BUILDING)	FD	5.11	2.10	02
A (BUILDING)	FD	5.37	2.10	02
A (BUILDING)	FD	5.49	2.10	02

SCHEDULE OF WINDOW/VENTILATION:

BUILDING NAME	NAME	LENGTH	HEIGHT	NOS
A (BUILDING)	W	0.53	1.20	06
A (BUILDING)	V	0.60	1.20	27
A (BUILDING)	V	0.61	1.20	03
A (BUILDING)	W	0.67	1.20	03
A (BUILDING)	W	0.76	1.20	03
A (BUILDING)	W	1.40	1.20	03
A (BUILDING)	W	1.52	1.20	06
A (BUILDING)	W	1.68	1.20	03

Balcony Calculations Table

FLOOR	SIZE	AREA	TOTAL AREA
FIRST FLOOR PLAN	0.49 X 38.24 X 1 X 1	18.35	63.96
	1.20 X 38.24 X 1 X 1	45.61	
TYPICAL - 2- 4 FLOOR PLAN	1.20 X 8.96 X 1 X 3	32.22	241.56
	1.20 X 4.85 X 1 X 3	17.46	
	0.90 X 5.11 X 1 X 3	13.26	
	1.20 X 3.61 X 3 X 3	37.35	
	1.20 X 14.12 X 1 X 3	43.92	
	1.20 X 8.94 X 1 X 3	32.16	
	1.10 X 1.71 X 1 X 3	5.64	
	1.20 X 3.40 X 1 X 3	12.24	
	0.48 X 8.94 X 1 X 3	12.84	
	0.48 X 8.79 X 1 X 3	12.69	
	0.78 X 4.85 X 1 X 3	11.31	
	0.92 X 3.81 X 1 X 3	10.47	
Total	-	-	305.52

UnitBUA Table for Building :A (BUILDING)

FLOOR	Name	UnitBUA Type	UnitBUA Area	Carpet Area	No. of Rooms	No. of Tenement
GROUND FLOOR PLAN	SHOP	SHOP	275.90	274.65	3	2
	SHOPS	SHOP	251.12	250.11	3	
FIRST FLOOR PLAN	SHOP	SHOP	294.29	274.69	3	2
	SHOPS	SHOP	281.29	261.93	3	
TYPICAL - 2- 4 FLOOR PLAN	FLAT 1	FLAT	150.76	125.27	9	15
	FLAT 2	FLAT	124.50	96.66	8	
	FLAT 3	FLAT	132.66	118.99	9	
	FLAT 4	FLAT	106.26	91.08	9	
	FLAT 5	FLAT	129.31	106.90	8	
Total:	-	-	3033.09	2678.06	141	19

LTP NAME AND SIGNATURE	STRUCTURAL ENG'S NAME AND SIGNATURE	BUILDER NAME AND SIGNATURE	DIGITAL SIGNATURE
RAJIV CHADDA CA/81/6480			

Name : ARUN KUMAR
Designation : Townplanner
Organization : GOVERNMENT OF

This is system generated MAP. No need to Physically Signed.