Project Title :SHIVA RANGLAL HEIGHTS

DATE	04-09-2024
SHEET NO.	1

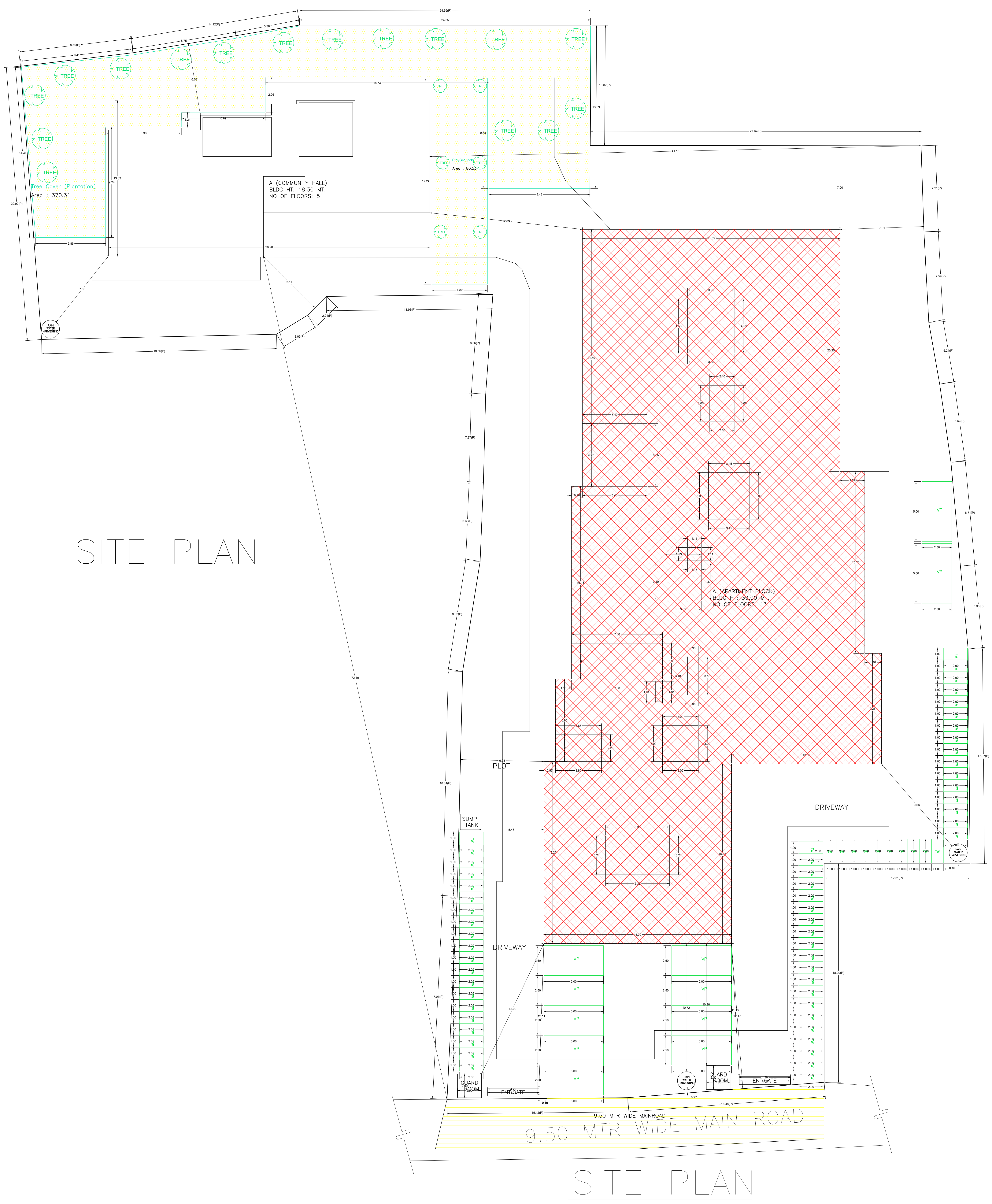

SITE PLAN

SITE PLAN

Proposal Basic Information

Proposal File No.	JMP/GH/0004/W05/2024/REV1
Owner Name	M/S RAMA INFRATECH, PARTNER :- (1) ROSHAN LAL GUPTA (2) NAVIN AGARWAL (3) NIRAJ AGARWAL
Khata No	42, 97, & 176
Plot No	402/1,402/2,403,404,405,406,407,409,418,55
Village Name	Jugsalai
Use	Residential
SubUse	Group Housing

Buildingwise Floor FAR Details

Floor Name	Building Name					Total				
	A (APARTMENT BLOCK)			A (COMMUNITY HALL)						
	Proposed Built Up Area (Sq.mt.)	Existing Built up Area (Sq.mt.)	Proposed FAR Area (Sq.mt.)	Proposed Built Up Area (Sq.mt.)	Proposed FAR Area (Sq.mt.)	Total Proposed Built Up Area (Sq.mt.)	Total Existing Built up Area (Sq.mt.)	Total FAR Area (Sq.mt.)	Total Maximum Permissible FAR Area (Sq.mt.)	Total Paid Built Up Area (Sq.mt.)
Basement Floor	2459.75	0.22	41.08	0.00	0.00	2459.75	0.22	41.08	41.08	2459.97
Ground Floor	1244.70	0.00	20.24	179.32	59.34	1424.02	0.00	79.58	79.58	1424.02
First Floor	1066.30	0.00	906.02	184.48	122.88	1250.78	0.00	1028.90	1028.90	1250.78
Second Floor	1066.44	0.00	903.23	225.78	198.05	1292.22	0.00	1101.28	820.61	962.89
Third Floor	1065.82	0.00	905.14	317.02	292.06	1382.84	0.00	1197.20	0.00	0.00
Fourth Floor	1066.44	0.00	903.23	317.02	292.41	1383.46	0.00	1195.64	0.00	0.00
Fifth Floor	1065.82	0.00	905.14	0.00	0.00	1065.82	0.00	905.14	0.00	0.00
Sixth Floor	1066.44	0.00	903.23	0.00	0.00	1066.44	0.00	903.23	0.00	0.00
Seventh Floor	1070.56	0.00	907.54	0.00	0.00	1070.56	0.00	907.54	0.00	0.00
Eighth Floor	1066.44	0.00	903.23	0.00	0.00	1066.44	0.00	903.23	0.00	0.00
Ninth Floor	1065.82	0.00	905.14	0.00	0.00	1065.82	0.00	905.14	0.00	0.00
Tenth Floor	1066.44	0.00	903.23	0.00	0.00	1066.44	0.00	903.23	0.00	0.00
Eleventh Floor	1065.82	0.00	905.14	0.00	0.00	1065.82	0.00	905.14	0.00	0.00
Twelfth Floor	1070.56	0.00	907.54	0.00	0.00	1070.56	0.00	907.54	0.00	0.00
Terrace Floor	0.00	0.00	0.00	71.76	0.00	71.76	0.00	0.00	0.00	0.00
Total :	16507.35	0.22	10919.13	1295.38	964.74	17802.73	0.22	11883.87	1970.17	6097.66

AREA STATEMENT JUGSALAI MUNICIPALITY	VERSION NO.: 1.0.71 VERSION DATE: 16/10/2020	
PROJECT DETAIL:		
Region: JHARKHAND URBAN LOCAL BODIES	Plot Use: Residential	
District: EAST SINGHBHUM	Plot SubUse: Group Housing	
Authority: JUGSALAI MUNICIPALITY	PlotNearbyReligiousStructure: NA	
Inward_No: JMP/GH/0004/W05/2024/REV1	Plot/SubPlot No: 402/1,402/2,403,404,405,406,407,409,418,55	
Application Type: General Proposal	North: -	
Project Type: Group Development Scheme	South: -	
Nature of Development: Revision	East: -	
Revise Case Type: Before 15th Sept 2004	West: Road Width - 9.50 MTR WIDE ROAD Access Road	
AREA DETAILS:		SQ.MT.
AREA OF PLOT (Minimum)	(A)	3965.48
NET AREA OF PLOT(Gross Plot Area - Deduction from Gross Plot area)	(A-Deductions)	3965.48
Deduction for Balance Plot Area(from Gross Plot Area)		
Common Plot		450.84
Total		450.84
BALANCE AREA OF PLOT(Net Plot Area - Recreational/Amenity space)	(A-Deductions)	3514.64
PLOT AREA FOR COVERAGE(Net Plot Area)	(A-Deductions)	3965.48
Plot Area for FAR (Net Plot Area + RoadWidening Area)	(A-Deductions)	3965.48
COVERAGE CHECK		
Permissible Coverage area (35.00 %)		1387.92
Proposed Coverage Area (32.81 %)		1301.08
Total Prop. Coverage Area (32.81 %)		1301.08
Balance coverage area (2.19 %)		86.84
FAR CHECK		
Perm. FAR Area (2.500)		9913.70
Maximum Permissible FAR Area (3.00)		11896.44
Total Perm. FAR area		11896.44
Residential FAR		10857.83
Commercial FAR		59.34
Special FAR		927.80
Proposed FAR Area		11883.90
Total Proposed FAR Area		11883.90
Consumed FAR (Factor)		3.00
Balance FAR Area		12.54
Total Paid Proposed FAR Area		1970.20
BUILT UP AREA CHECK		
Total Proposed BuiltUp Area		17802.95
ARCHITECT (Regd)		ANOOP KUMAR
ENGGINEER (Regd)		
SUPERVISOR (Regd)		
OWNER (Regd)		M/S RAMA INFRATECH, PARTNER :- (1) ROSHAN LAL GUPTA (2) NAVIN AGARWAL (3) NIRAJ AGARWAL
DEVELOPMENT AUTHORITY		LOCAL BODY

COLOR INDEX	
PLOT BOUNDARY	■
ABUTTING ROAD	🟩
PROPOSED CONSTRUCTION	🟥
COMMON PLOT	🟨
ROAD WIDENING AREA	🟨
EXISTING (To be retained)	🟦
EXISTING (To be demolished)	🟨

Required Parking(Table 7a)

Building Name	Type	SubUse	Area (Sq.mt.)	Units		Car			Visitors Car			TwoWheeler		
				Reqd.	Prop.	Reqd./Unit	Reqd.	Prop.	Reqd./Unit	Reqd.	Prop.	Reqd./Unit	Reqd.	Prop.
A (APARTMENT BLOCK)	Hazardous	Sewage Treatment Plant	> 0	400	22.39	1	1	-	-	-	-	-	-	-
			> 0	400	22.39	-	-	-	-	-	-	1	1	-
	Residential	Group Housing	0 - 140	1	60.00	1	60	-	-	-	-	-	-	-
			> 140.0	1	24.00	1	36	-	-	-	-	-	-	-
			0.0 - 30	1	-	1	-	-	-	-	-	-	-	-
			0.0 - 30	1	-	-	-	-	-	-	-	1	-	-
			30.01 - 60	1	-	1	-	-	-	-	-	-	-	-
			30.01 - 60	1	-	-	-	-	-	-	-	1	-	-
			0 - 140	1	60.00	-	-	-	1	6	-	-	-	-
			> 140.0	1	24.00	-	-	-	1	2	-	-	-	-
			0.0 - 30	1	-	-	-	-	1	-	-	-	-	-
			30.01 - 60	1	-	-	-	-	1	-	-	-	-	-
A (COMMUNITY HALL)	Commercial	Retail Shop	> 0	50	59.34	1	1	-	-	-	-	-	-	-
			> 0	50	59.34	-	-	-	-	-	-	1	3	-
	Assembly	Community Hall	> 0	25	10.00	1	1	-	-	-	-	-	-	-
			> 0	25	10.00	-	-	-	-	-	-	1	1	-
		Gymnasia	> 0	25	10.00	1	1	-	-	-	-	-	-	-
			> 0	25	10.00	-	-	-	-	-	-	1	1	-
		Club	> 0	25	10.00	1	1	-	-	-	-	-	-	-
			> 0	25	10.00	-	-	-	-	-	-	1	1	-
	Public Utility	Health Club	> 0	300	292.41	1	1	-	-	-	-	-	-	-
			> 0	300	292.41	-	-	-	-	-	-	1	3	-
	Total :		-	-	-	-	102	105	-	8	11	-	10	108

Parking Check (Table 7b)

Vehicle Type	Reqd.		Prop.	
	No.	Area	No.	Area
Car	-	-	105	1312.50
Total Car	102	1275.00	105	1312.50
Visitor's Car Parking	-	-	11	137.50
Total Visitor Parking	8	100.00	11	137.50
TwoWheeler	-	-	108	216.00
Total TwoWheeler	10	20.00	108	216.00
Other Parking	-	-	-	2091.88
Total	1395.00		3973.88	

FAR & Tenement Details (Table 4c–1)

Building	No. of Same Bldg	Gross Built Up Area (Sq.mt.)	Deductions From Gross BUA(Area in Sq.mt.)	Total Built Up Area (Sq.mt.)	Existing Built Up Area (Sq.mt.)	Proposed Built Up Area (Sq.mt.)	Deductions (Area in Sq.mt.)					Proposed FAR Area (Sq.mt.)					Add Area In FAR (Sq.mt.)	Total FAR Area (Sq.mt.)	Total Consumed Additional FAR Area (Sq.mt.)	Tnmt (No.)
			Cutout				StairCase	Lift	Accessory Use	Ramp	Parking	Resi.	Commercial	Assembly	Public Utility	Hazardous	Stair			
A (APARTMENT BLOCK)	1	17775.87	1268.30	16507.57	0.22	16507.35	842.22	269.17	1068.54	89.19	3205.31	10857.81	0.00	0.00	0.00	22.39	18.69	10919.13	10919.13	85
A (COMMUNITY HALL)	1	1535.93	240.55	1295.38	0.00	1295.38	134.29	23.43	101.33	0.00	71.59	0.00	59.34	613.00	292.41	0.00	0.00	964.74	964.74	05
Grand Total :	2	19311.80	1508.85	17802.95	0.22	17802.73	976.51	292.60	1169.87	89.19	3276.90	10857.81	59.34	613.00	292.41	22.39	18.69	11883.87	11883.87	90

Building USE/SUBUSE Details

Building Name	Building Use	Building SubUse	Building Structure	Floor Name	Floor Use	Floor SubUse	FAR Name	FAR Use	FAR SubUse
A (APARTMENT BLOCK)	Residential	Group Housing	Multistoried	BASEMENT FLOOR PLAN	Hazardous	Sewage Treatment Plant	Hazardous	Hazardous	Sewage Treatment Plant
				GROUND FLOOR PLAN	Residential	Group Housing	-	-	-
				TYPICAL - 7 & 12 FLOOR PLAN	Residential	Group Housing	Residential FAR	Residential	Group Housing
				TYPICAL - 3, 5, 9 & 11 FLOOR PLAN	Residential	Group Housing	Residential FAR	Residential	Group Housing
				TYPICAL - 2, 4, 6, 8 & 10 FLOOR PLAN	Residential	Group Housing	Residential FAR	Residential	Group Housing
				FIRST FLOOR PLAN	Residential	Group Housing	Residential FAR	Residential	Group Housing
				TERRACE FLOOR PLAN	Residential	Group Housing	-	-	-
A (COMMUNITY HALL)	Commercial	Shop	Multistoried	GROUND FLOOR PLAN	Commercial	Retail Shop	Commercial	Commercial	Retail Shop
				FIRST FLOOR PLAN	Assembly	Community Hall	Special FAR	Assembly	Community Hall
				SECOND FLOOR PLAN	Assembly	Gymnasia	Assembly	Assembly	Gymnasia
				THIRD FLOOR PLAN	Assembly	Club	Assembly	Assembly	Club
				FOURTH FLOOR PLAN	Public Utility	Health Club	Public Utility	Public Utility	Health Club
				TERRACE FLOOR PLAN	Commercial	Shop	-	-	-

LTP NAME AND SIGNATURE	STRUCTURAL ENG'S NAME AND SIGNATURE	BUILDER NAME AND SIGNATURE	DIGITAL SIGNATURE
ANOOP KUMAR JMP/ENG/0001/2020			

Name : SANDIP PASWAN
Designation : Executive Officer
Organization : CHIRKUNDA

This is system generated MAP. No need to Physically Signed.

ISO_full_bleed_2A0_(1189.00_x_1682.00_MM)

Project Title :SHIVA RANGLAL HEIGHTS

DATE	04-09-2024
SHEET NO.	2
	-

Proposal Basic Information

Proposal File No.	JMP/GH/0004/W05/2024/REV1
Owner Name	M/S RAMA INFRATECH, PARTNER :- (1) ROSHAN LAL GUPTA (2) NAVIN AGARWAL (3) NIRAJ AGARWAL
Khata No	42, 97, & 176
Plot No	402/1,402/2,403,404,405,406,407,409,418,55
Village Name	Jugsalai
Use	Residential
SubUse	Group Housing

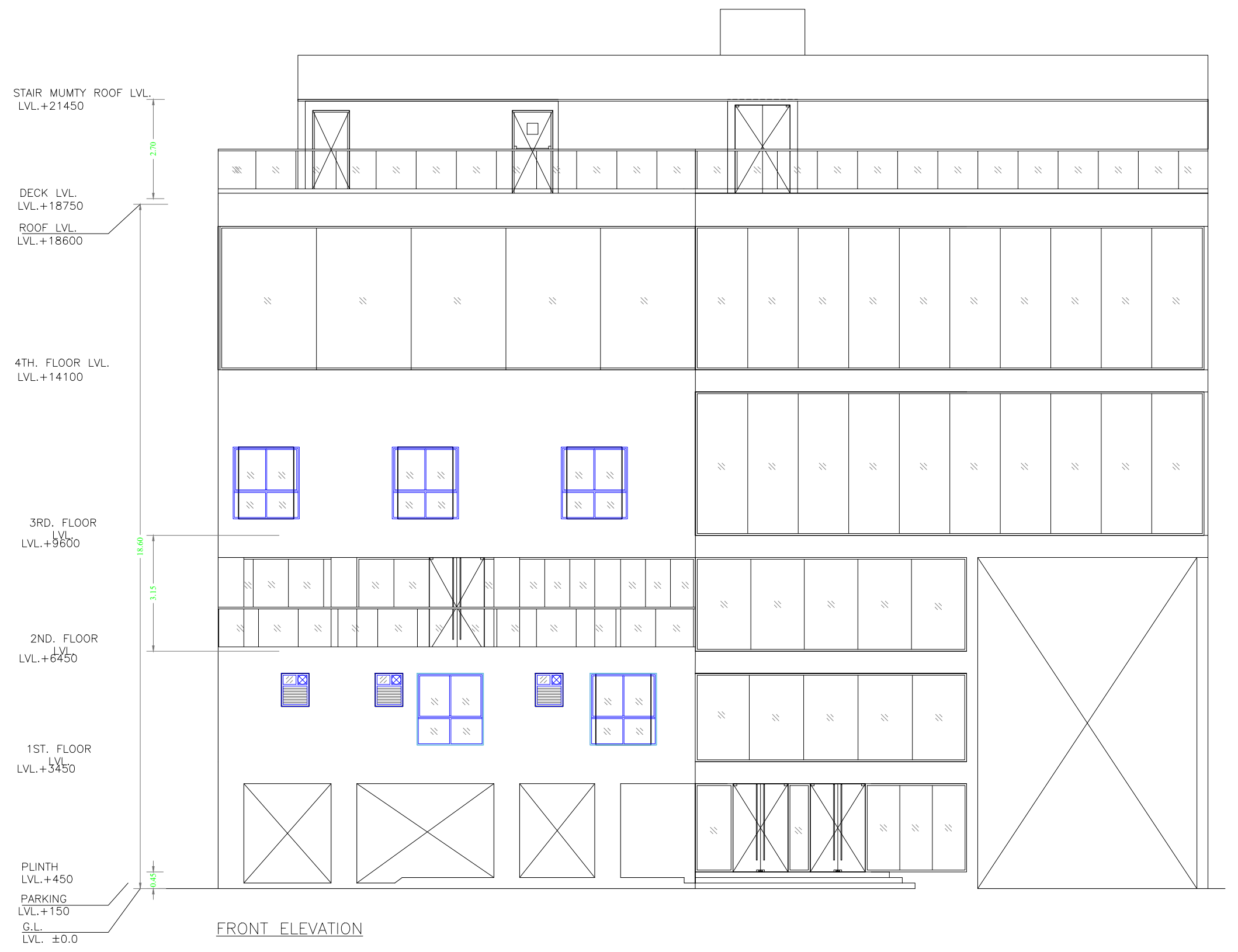
STAIR MUMTY ROOF LVL. LVL.+21450
DECK LVL. LVL.+18750
ROOF LVL. LVL.+18600
4TH. FLOOR LVL. LVL.+14100
3RD. FLOOR LVL.+9600
2ND. FLOOR LVL.+6450
1ST. FLOOR LVL.+3450
PLINTH LVL.+450
PARKING LVL.+150
G.L. LVL. ±0.0

FRONT ELEVATION

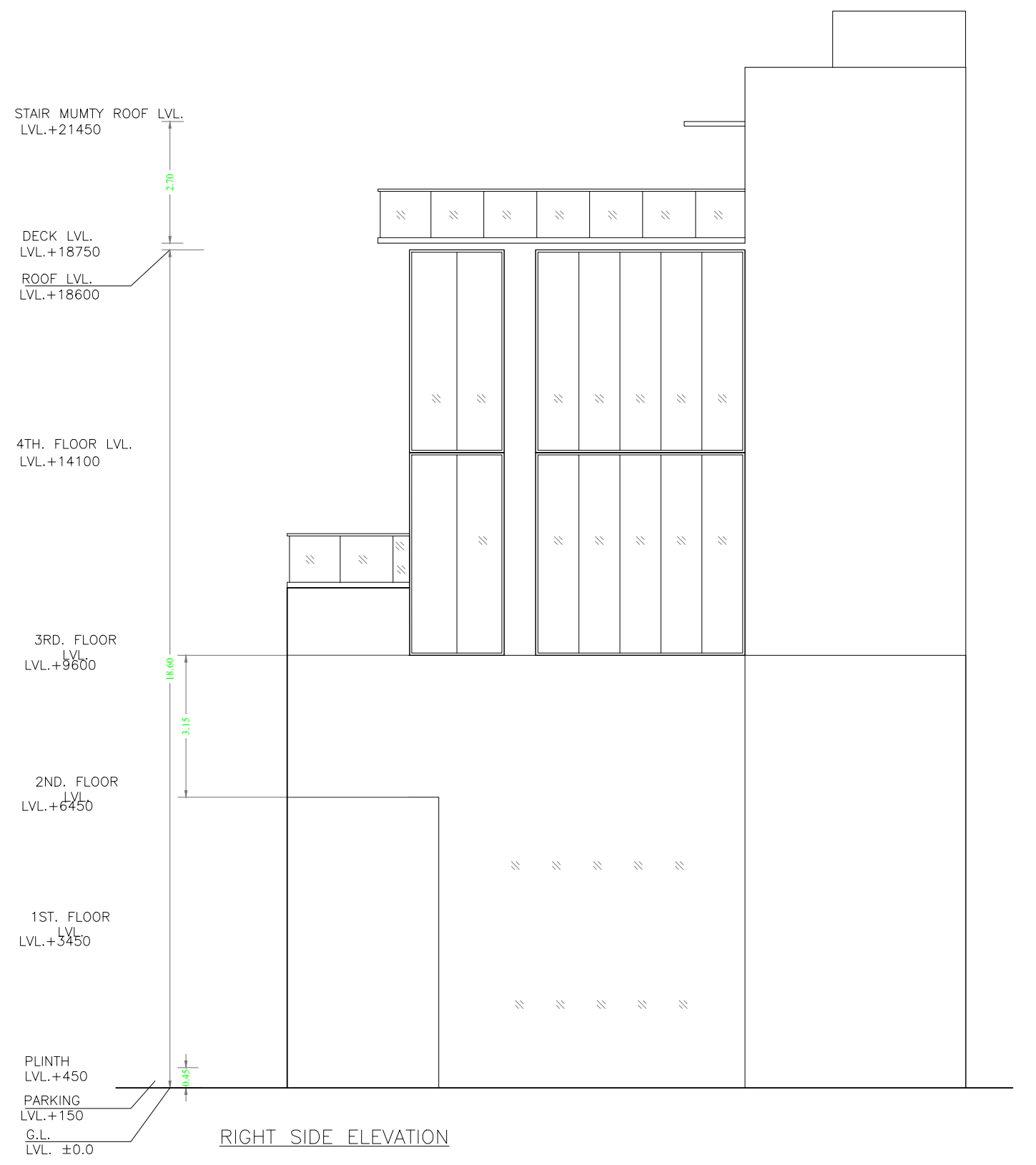
STAIR MUMTY ROOF LVL. LVL.+21450
DECK LVL. LVL.+18750
ROOF LVL. LVL.+18600
4TH. FLOOR LVL. LVL.+14100
3RD. FLOOR
2ND. FLOOR
1ST. FLOOR
PLINTH LVL.+450
PARKING LVL.+150
G.L. LVL. ±0.0

RIGHT SIDE ELEVATION

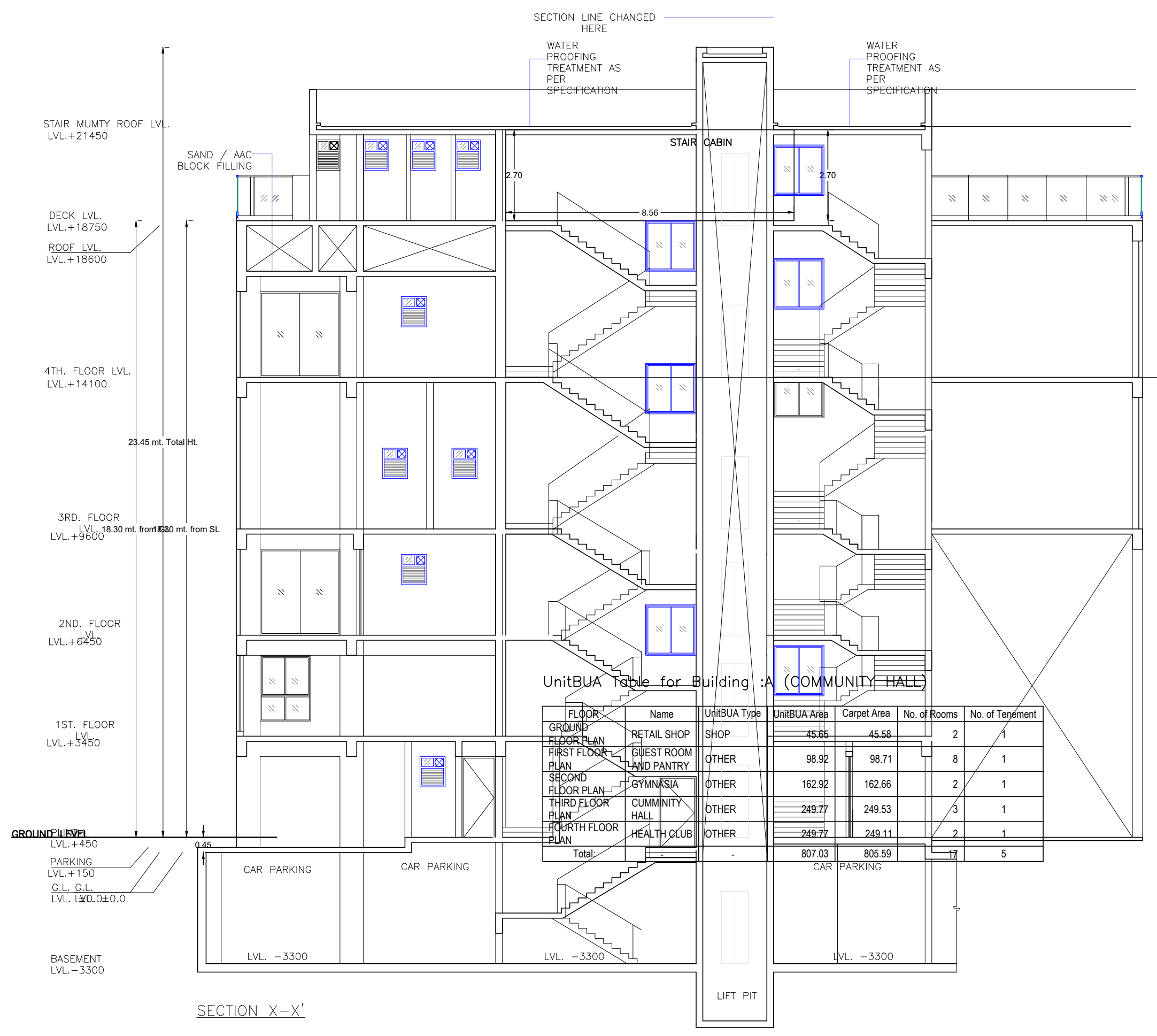
SECTION LINE CHANGED HERE
WATER PROOFING TREATMENT AS PER SPECIFICATION
SAND / AAC BLOCK FILLING
STAIR CABIN
STAIR MUMTY ROOF LVL. LVL.+21450
DECK LVL. LVL.+18750
ROOF LVL. LVL.+18600
4TH. FLOOR LVL. LVL.+14100
3RD. FLOOR
2ND. FLOOR
1ST. FLOOR
GROUND LEVEL
PLINTH LVL.+450
PARKING LVL.+150
G.L. LVL. ±0.0
BASEMENT LVL.-3300
CAR PARKING
LVL. -3300
LIFT PIT

UnitBUA Table for Building :A (COMMUNITY HALL)

FLOOR	Name	UnitBUA Type	UnitBUA Area	Carpet Area	No. of Rooms	No. of Tenement
GROUND FLOOR PLAN	RETAIL SHOP	SHOP	45.65	45.58	2	1
FIRST FLOOR PLAN	GUEST ROOM AND PANTRY	OTHER	98.92	98.71	8	1
SECOND FLOOR PLAN	GYMNASIA	OTHER	162.92	162.66	2	1
THIRD FLOOR PLAN	CUMMINITY HALL	OTHER	249.77	249.53	3	1
FOURTH FLOOR PLAN	HEALTH CLUB	OTHER	249.77	249.11	2	1
Total:	-	-	807.03	805.59	17	5

SECTION X-X'

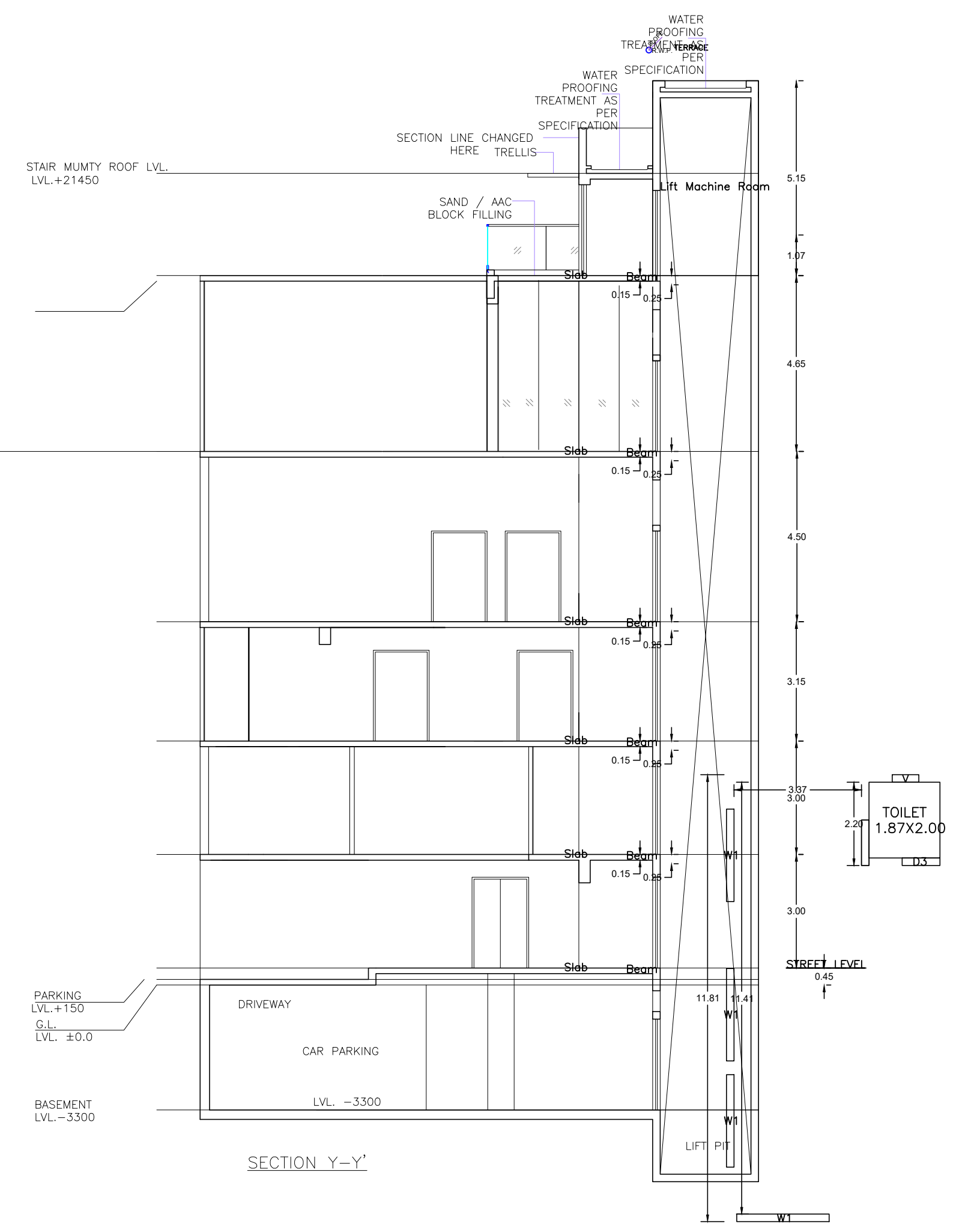
WATER PROOFING TREATMENT AS PER SPECIFICATION
SECTION LINE CHANGED HERE
SAND / AAC BLOCK FILLING
Lift Machine Room
STAIR MUMTY ROOF LVL. LVL.+21450
TOILET 1.87X2.00
DRIVEWAY
CAR PARKING
PARKING LVL.+150
G.L. LVL. ±0.0
BASEMENT LVL.-3300
LVL. -3300
LIFT PIT

SECTION Y-Y'

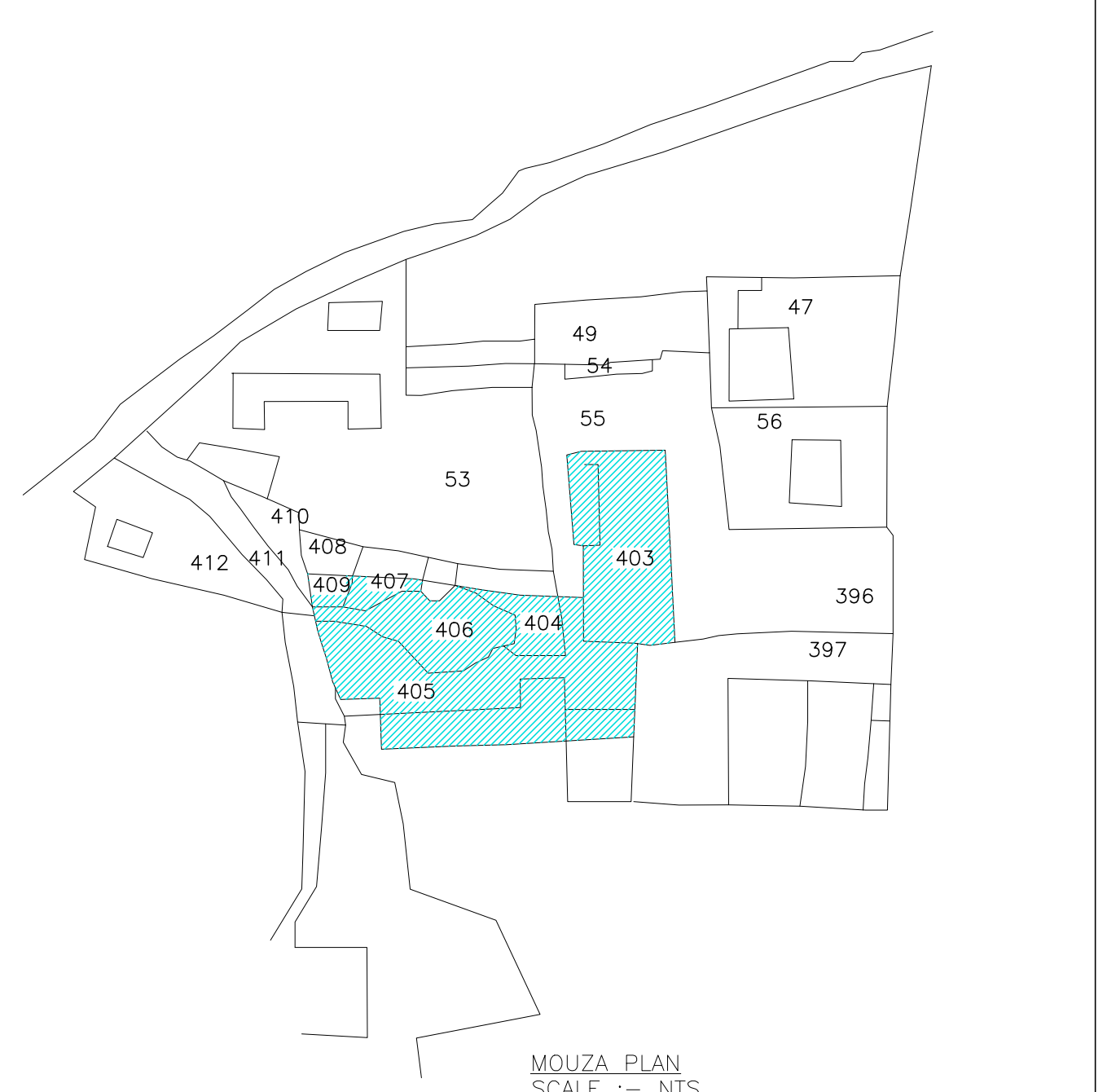
47
49
54
55
56
53
410
412
411
408
409
407
403
406
404
405
396
397

MOUZA PLAN
SCALE :- NTS

Building :A (COMMUNITY HALL)

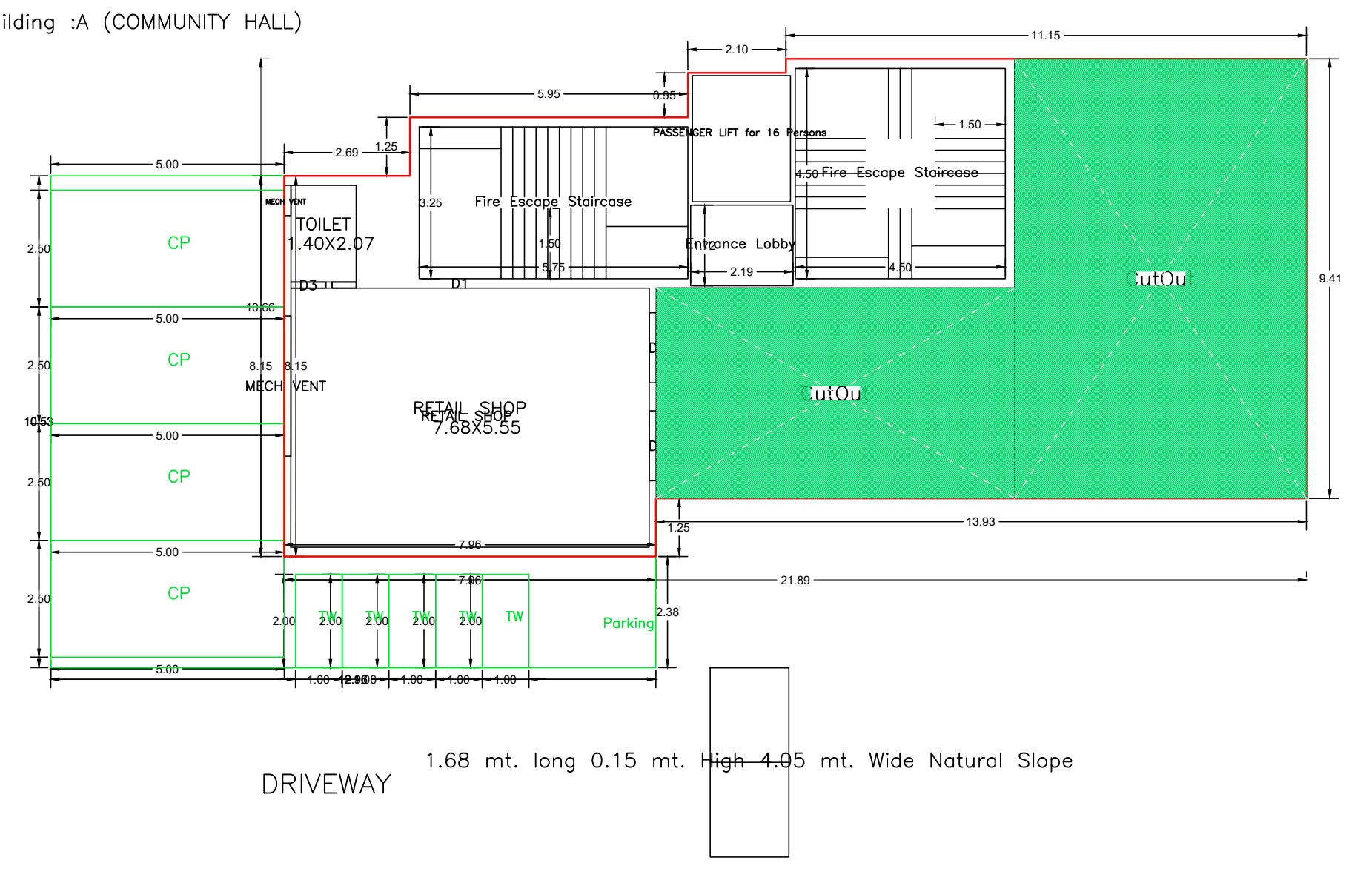
PASSENGER LIFT for 16 Persons
Fire Escape Staircase
Entrance Lobby
TOILET 1.40X2.67
MECH VENT
RETAIL SHOP 7.68X5.55
CP
Parking

DRIVEWAY

1.68 mt. long 0.15 mt. High 4.05 mt. Wide Natural Slope

GROUND FLOOR PLAN
(Proposed)
(SCALE 1:100)

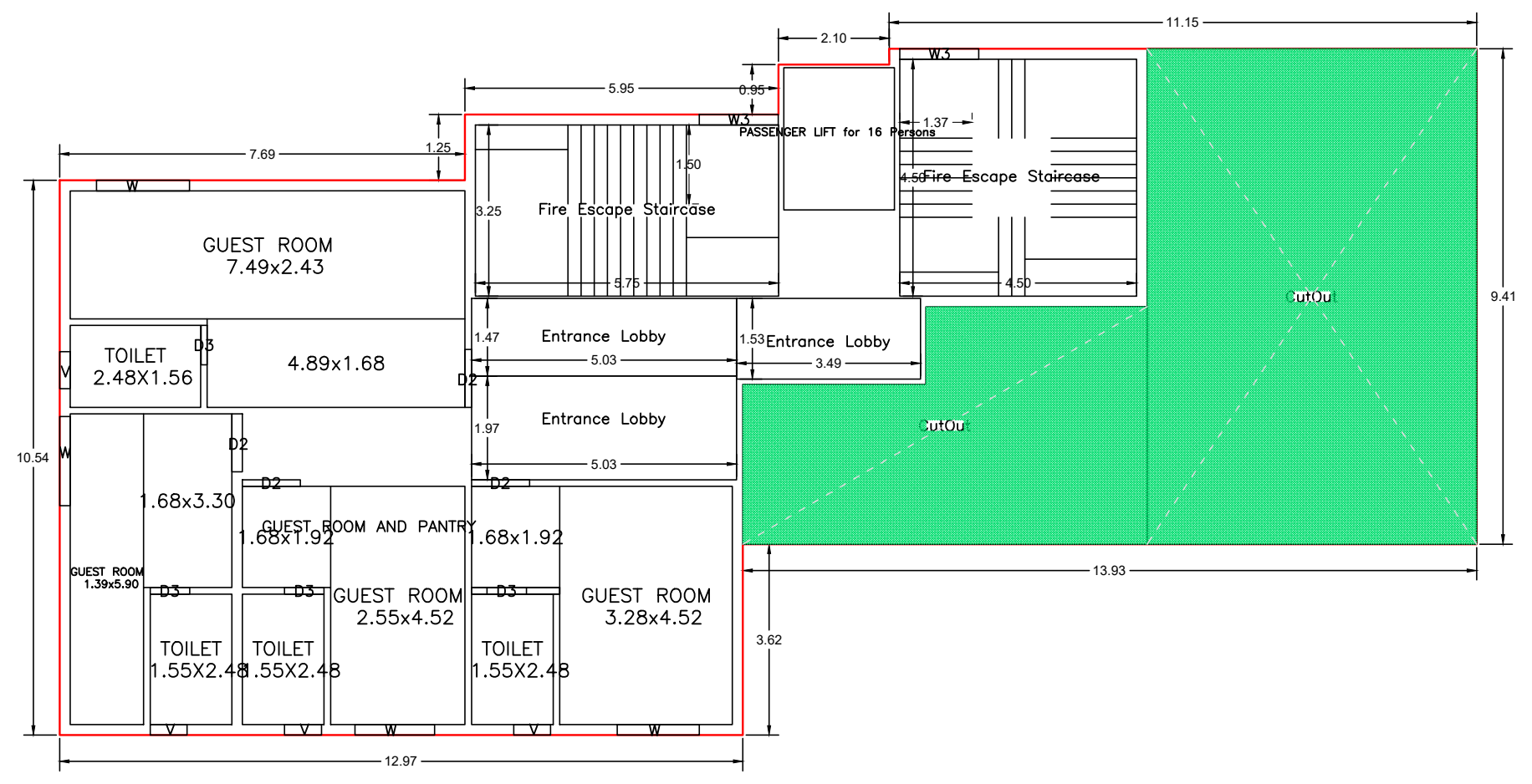
PASSENGER LIFT for 16 Persons
Fire Escape Staircase
GUEST ROOM 7.49x2.43
TOILET 2.48X1.56
4.89x1.68
Entrance Lobby
GUEST ROOM AND PANTRY
1.68x3.30
1.68x1.92
GUEST ROOM 2.55x4.52
GUEST ROOM 3.28x4.52
TOILET 1.55X2.48
TOILET 1.55X2.48
TOILET 1.55X2.48

FIRST FLOOR PLAN
(Proposed)
(SCALE 1:100)

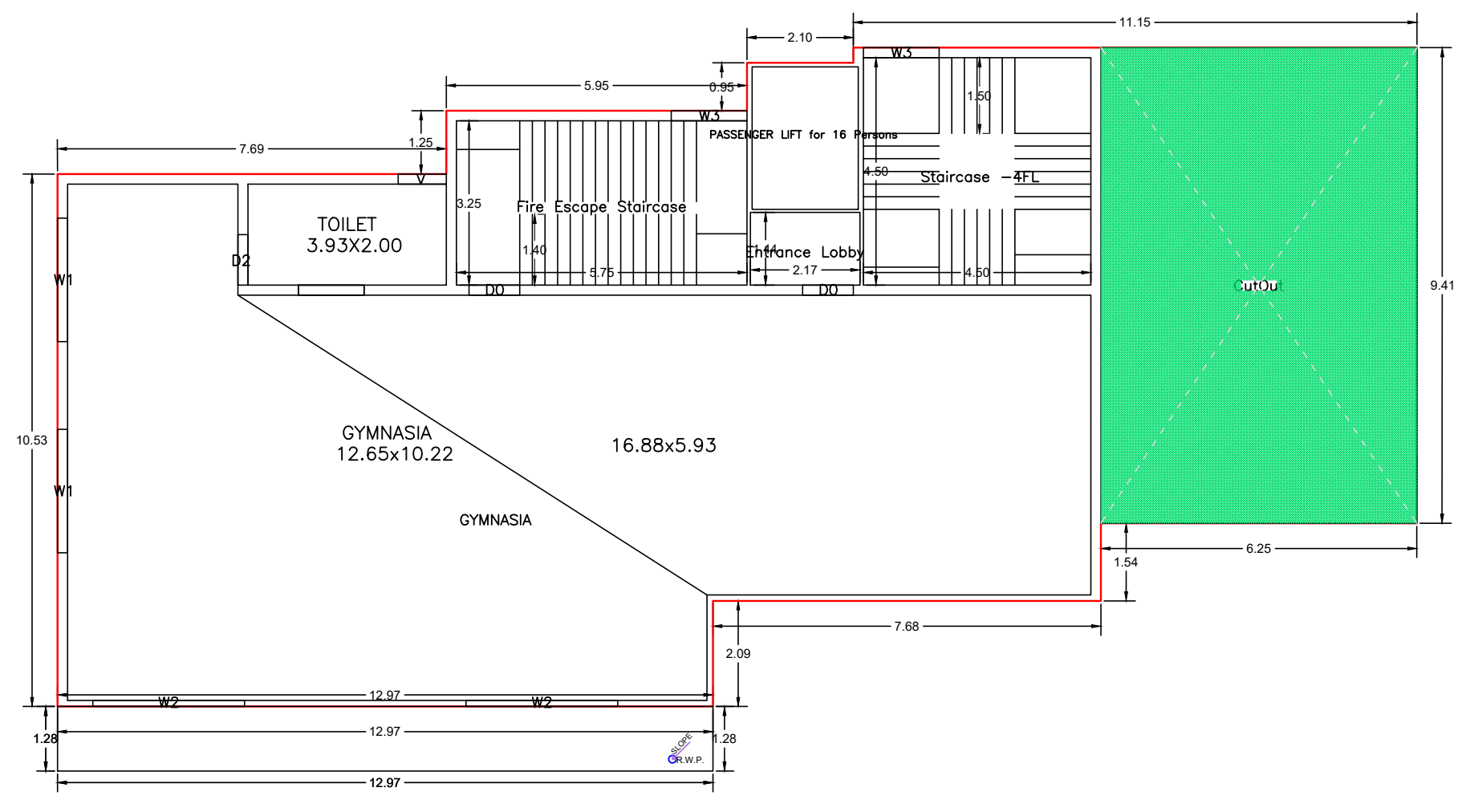
PASSENGER LIFT for 16 Persons
Fire Escape Staircase
TOILET 3.93X2.00
Entrance Lobby
GYMNASIA 12.65x10.22
16.68x5.93
GYMNASIA

SECOND FLOOR PLAN
(Proposed)
(SCALE 1:100)

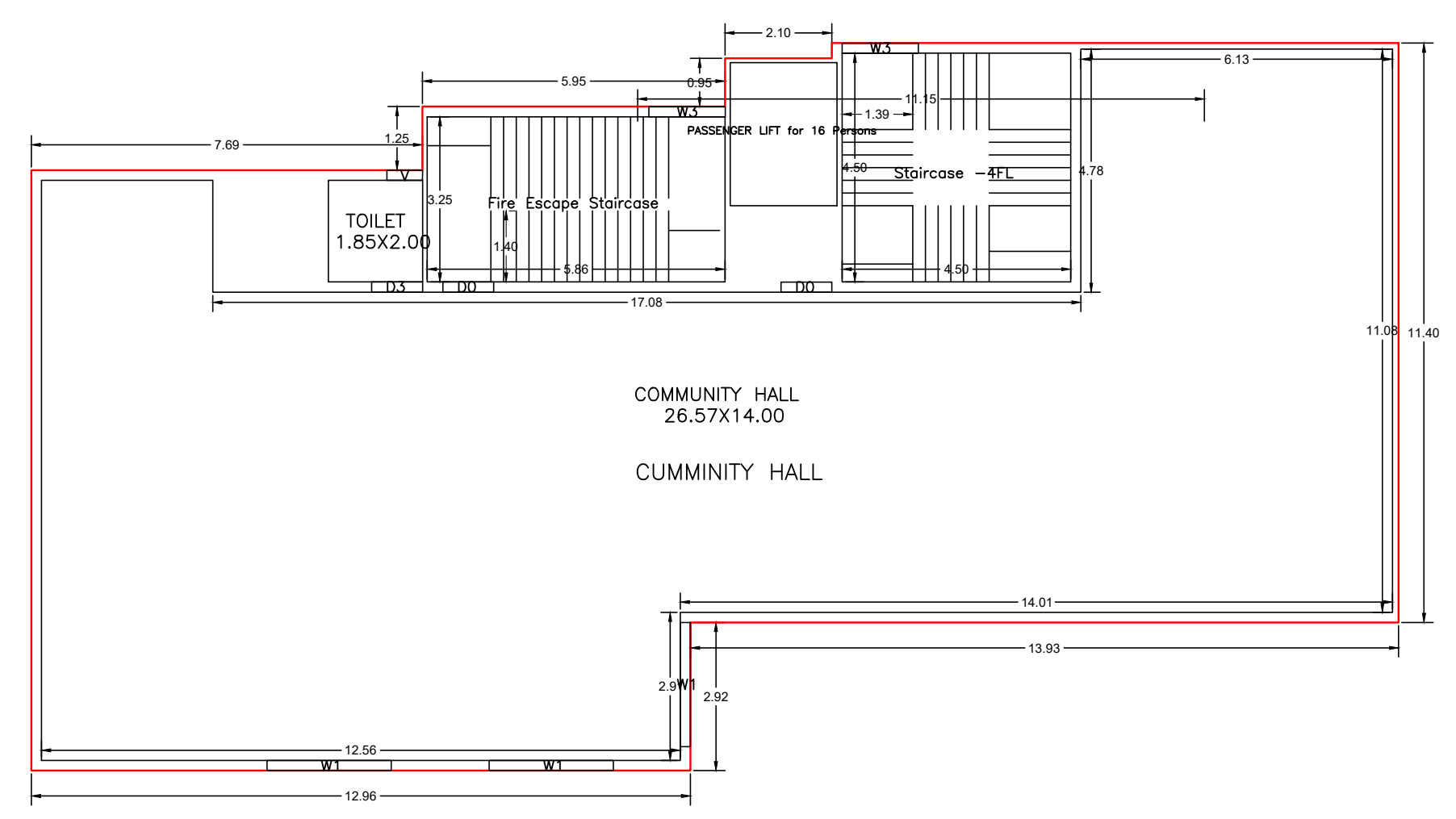
PASSENGER LIFT for 16 Persons
Fire Escape Staircase
TOILET 1.85X2.00
COMMUNITY HALL 26.57X14.00
CUMMINITY HALL

THIRD FLOOR PLAN
(Proposed)
(SCALE 1:100)

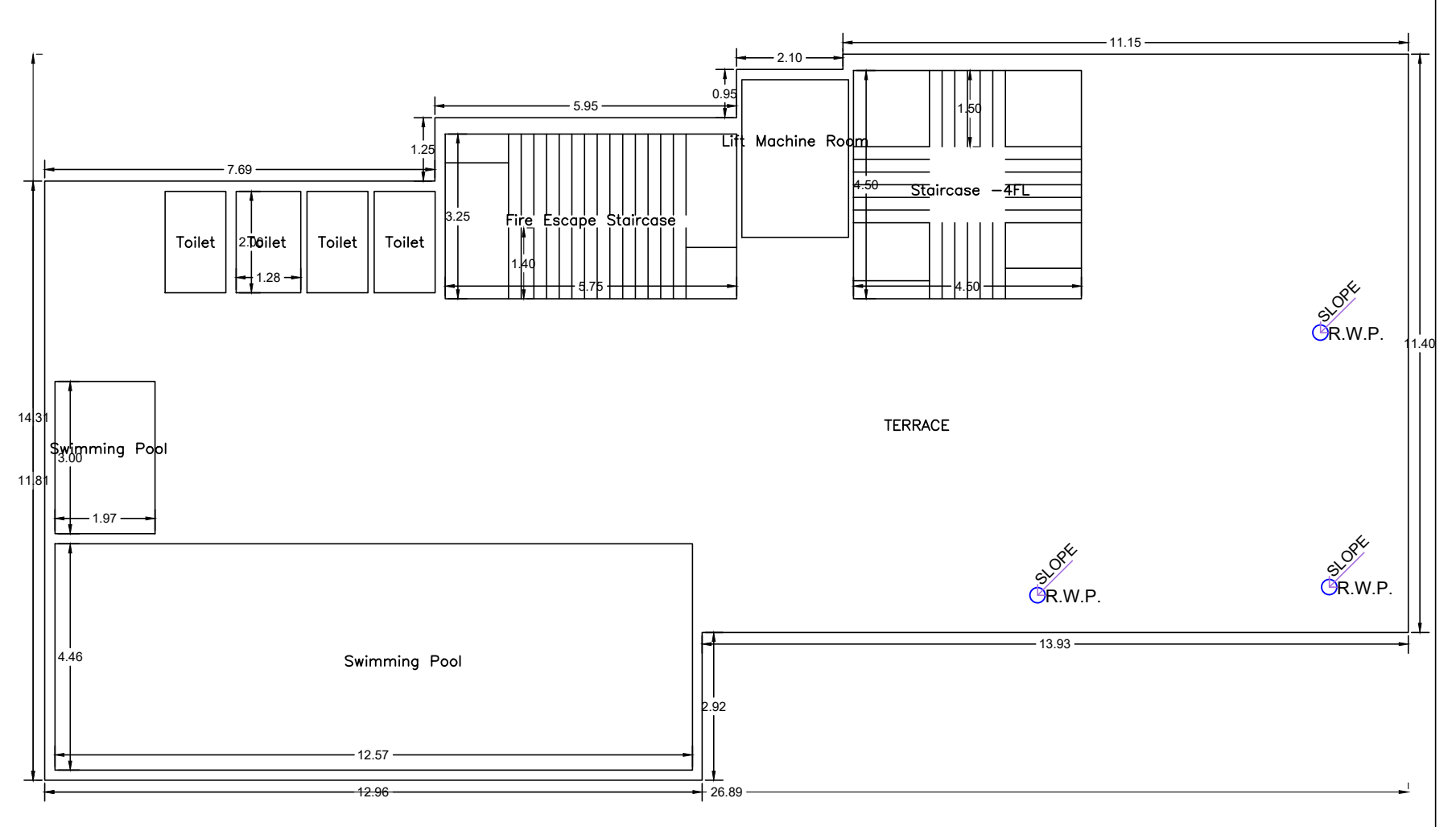
Lift Machine Room
Fire Escape Staircase
Toilet
Toilet
Toilet
Toilet
TERRACE
Swimming Pool
Swimming Pool
R.W.P.
R.W.P.
R.W.P.

TERRACE FLOOR PLAN
(SCALE 1:100)

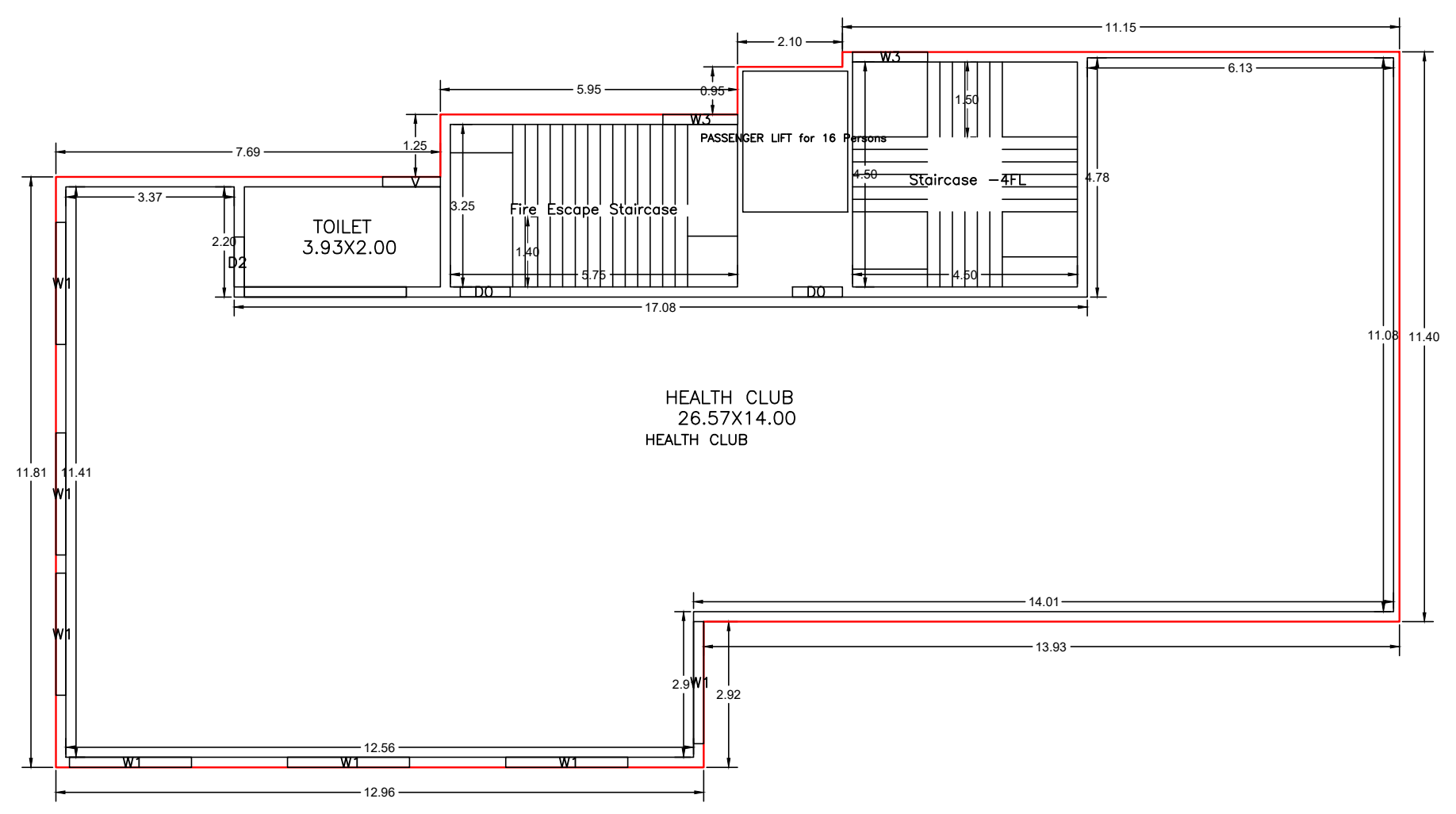
PASSENGER LIFT for 16 Persons
Fire Escape Staircase
TOILET 3.93X2.00
HEALTH CLUB 26.57X14.00
HEALTH CLUB

FOURTH FLOOR PLAN
(Proposed)
(SCALE 1:100)

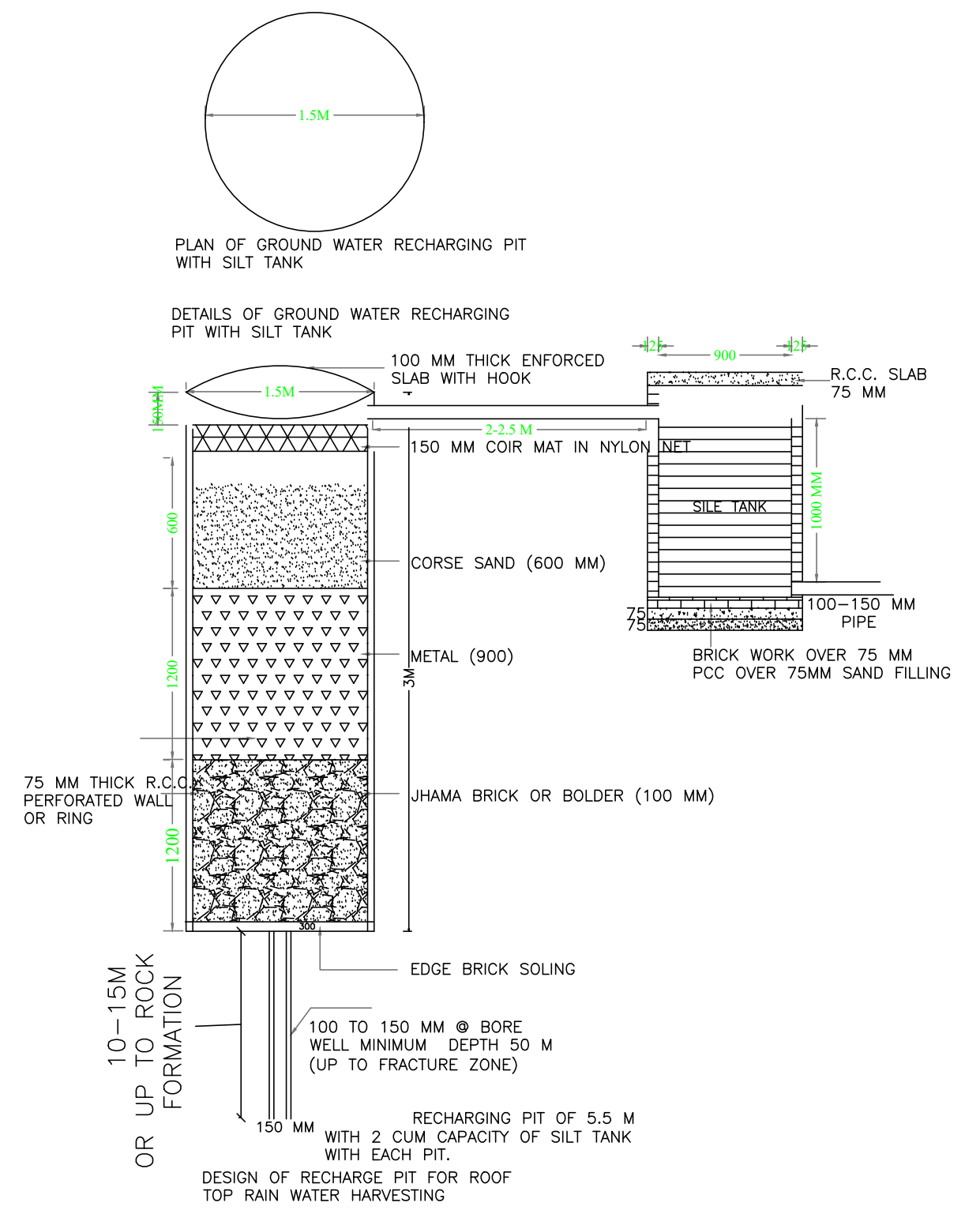
PLAN OF GROUND WATER RECHARGING PIT WITH SILT TANK
DETAILS OF GROUND WATER RECHARGING PIT WITH SILT TANK
100 MM THICK ENFORCED SLAB WITH HOOK
R.C.C. SLAB 75 MM
150 MM COIR MAT IN NYLON NET
SILT TANK
CORSE SAND (600 MM)
METAL (900)
100-150 MM PIPE
BRICK WORK OVER 75 MM PCC OVER 75MM SAND FILLING
75 MM THICK R.C.C PERFORATED WALL OR RING
JHAMA BRICK OR BOLDER (100 MM)
EDGE BRICK SOLING
10~15M OR UP TO ROCK FORMATION
100 TO 150 MM Ø BORE WELL MINIMUM DEPTH 50 M (UP TO FRACTURE ZONE)
150 MM
RECHARGING PIT OF 5.5 M WITH 2 CUM CAPACITY OF SILT TANK WITH EACH PIT.

DESIGN OF RECHARGE PIT FOR ROOF TOP RAIN WATER HARVESTING

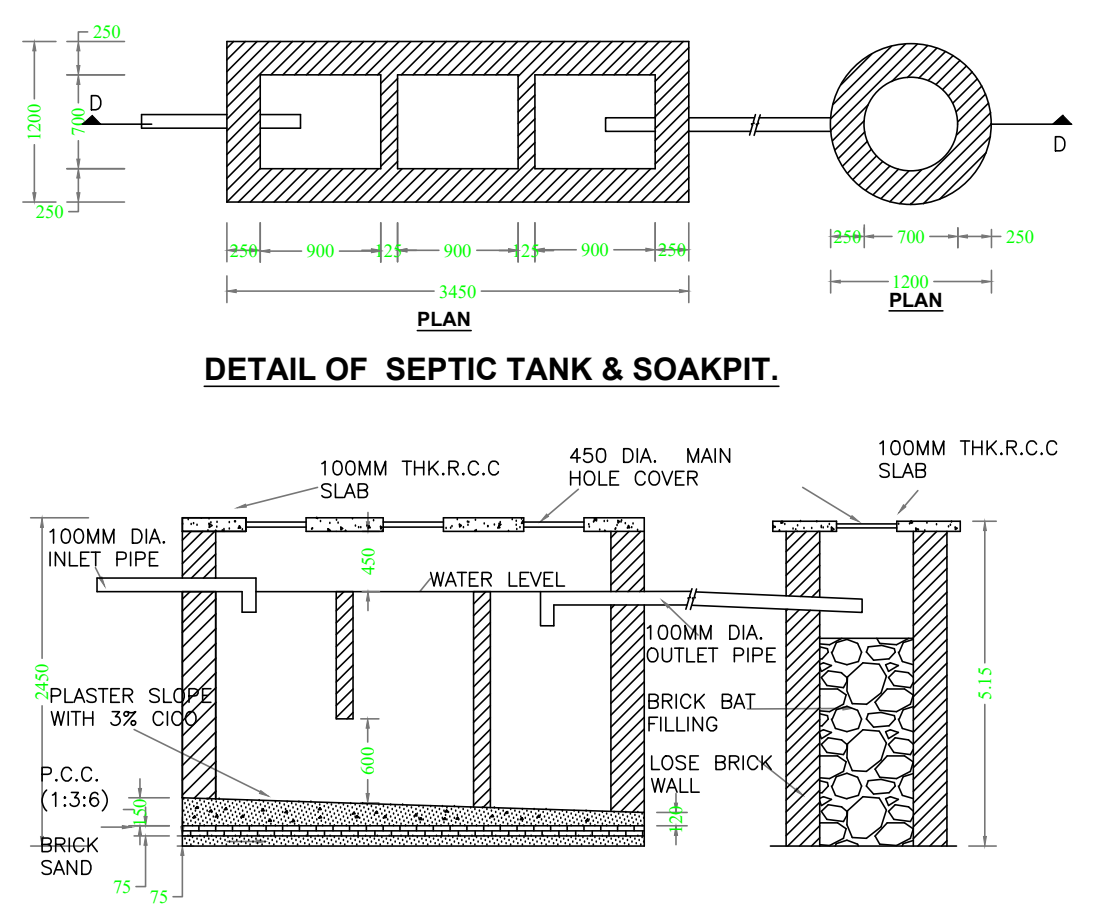
PLAN
PLAN
100MM THK.R.C.C SLAB
450 DIA. MAIN HOLE COVER
100MM THK.R.C.C SLAB
100MM DIA. INLET PIPE
WATER LEVEL
100MM DIA. OUTLET PIPE
PLASTER SLOPE WITH 3% CM
BRICK BAT FILLING
LOSE BRICK WALL
P.C.C. (1:3:6)
BRICK SAND

DETAIL OF SEPTIC TANK & SOAKPIT.

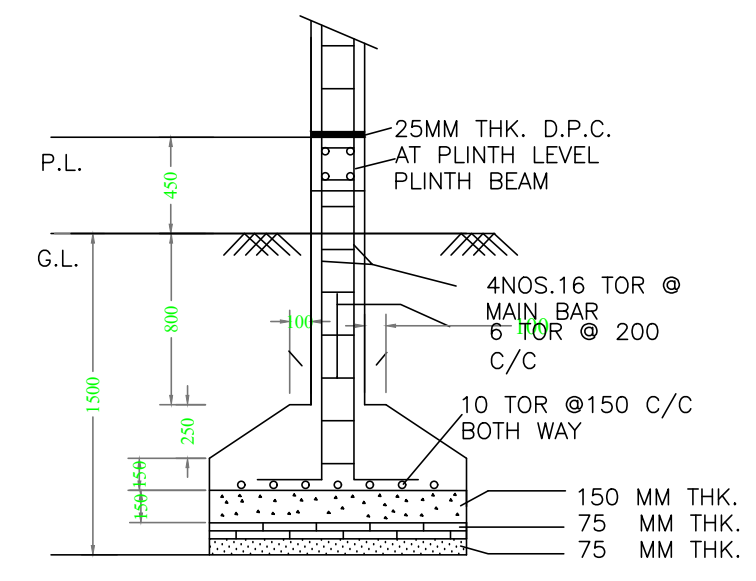
P.L.
G.L.
25MM THK. D.P.C. AT PLINTH LEVEL
PLINTH BEAM
4NOS.16 TOR Ø MAIN BAR
8 TOR @ 200 C/C
10 TOR @150 C/C BOTH WAY
150 MM THK. P.C.C. (1:4:8)
75 MM THK. BRICK SOLING
75 MM THK. SAND FILLING

SECTION -CC

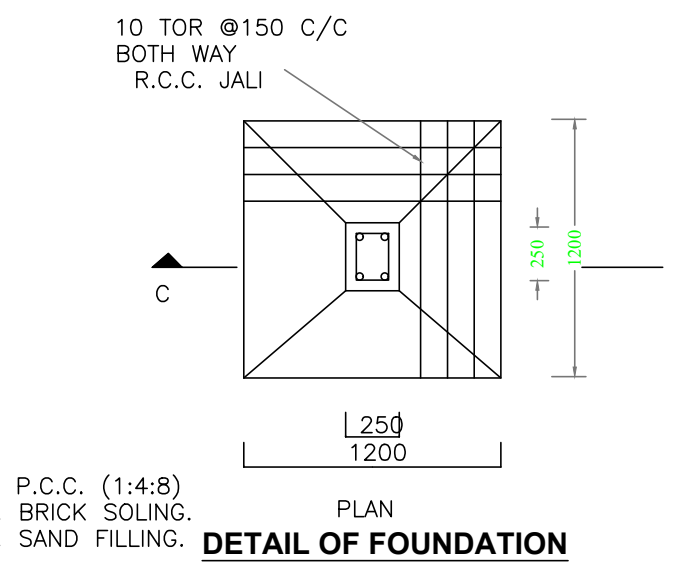
10 TOR @150 C/C BOTH WAY R.C.C. JALI
C
1.200
1.200
PLAN

DETAIL OF FOUNDATION

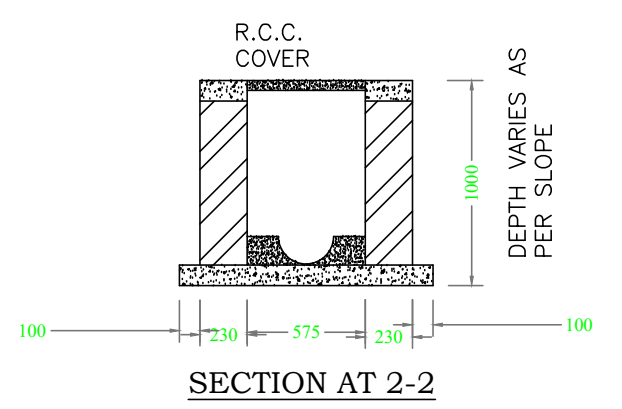
R.C.C. COVER
DEPTH VARIES AS PER SLOPE

SECTION AT 2-2

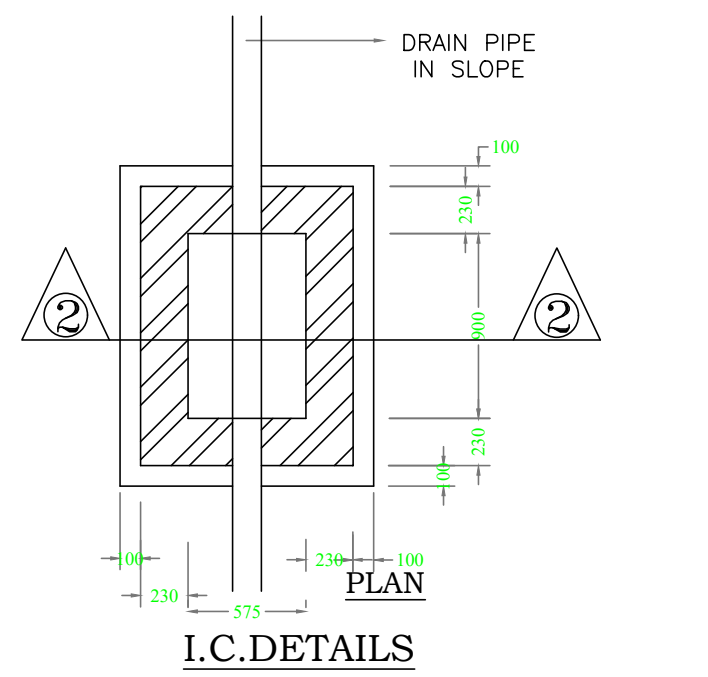
DRAIN PIPE IN SLOPE
PLAN

I.C.DETAILS

Floor Name	Gross Builtup Area	Deductions From Gross BUA(Area in Sq.mt.)	Total Built Up Area (Sq.mt.)	Deductions (Area in Sq.mt.)				Proposed FAR Area (Sq.mt.)			Total FAR Area (Sq.mt.)	Total Consumed Additional FAR Area (Sq.mt.)	Tnmt (No.)
		Cutout		StairCase	Lift	Accessory Use	Parking	Commercial	Assembly	Public Utility			
Ground Floor	272.70	93.38	179.32	38.94	5.67	3.78	71.59	59.34	0.00	0.00	59.34	59.34	01
First Floor	272.82	88.34	184.48	38.93	0.00	22.67	0.00	0.00	122.88	0.00	122.88	122.88	01
Second Floor	284.61	58.83	225.78	18.69	5.92	3.12	0.00	0.00	198.05	0.00	198.05	198.05	01
Third Floor	317.02	0.00	317.02	19.04	5.92	0.00	0.00	0.00	292.06	0.00	292.06	292.06	01
Fourth Floor	317.02	0.00	317.02	18.69	5.92	0.00	0.00	0.00	0.00	292.41	292.41	292.41	01
Terrace Floor	71.76	0.00	71.76	0.00	0.00	71.76	0.00	0.00	0.00	0.00	0.00	0.00	00
Total :	1535.93	240.55	1295.38	134.29	23.43	101.33	71.59	59.34	613.00	292.41	964.74	964.74	05
Total Number of Same Buildings :	1												
Total :	1535.93	240.55	1295.38	134.29	23.43	101.33	71.59	59.34	613.00	292.41	964.74	964.74	05

SCHEDULE OF DOOR:

BUILDING NAME	NAME	LENGTH	HEIGHT	NOS
A (COMMUNITY HALL)	D3	0.75	2.13	05
A (COMMUNITY HALL)	D2	1.00	2.13	02
A (COMMUNITY HALL)	D0	1.00	2.13	06
A (COMMUNITY HALL)	D3	1.00	2.13	02
A (COMMUNITY HALL)	D2	1.10	2.13	04
A (COMMUNITY HALL)	D	1.50	2.13	02

SCHEDULE OF WINDOW/VENTILATION:

BUILDING NAME	NAME	LENGTH	HEIGHT	NOS
A (COMMUNITY HALL)	MECH VENT	0.65	2.70	01
A (COMMUNITY HALL)	V	0.70	2.70	06
A (COMMUNITY HALL)	V	0.95	2.70	01
A (COMMUNITY HALL)	V	1.16	2.70	01
A (COMMUNITY HALL)	W3	1.50	2.70	04
A (COMMUNITY HALL)	W	1.51	2.70	01
A (COMMUNITY HALL)	W	1.56	2.70	01
A (COMMUNITY HALL)	W	1.69	2.70	01
A (COMMUNITY HALL)	W	1.77	2.70	01
A (COMMUNITY HALL)	W1	2.44	2.70	16
A (COMMUNITY HALL)	MECH VENT	3.00	2.70	01
A (COMMUNITY HALL)	W2	3.00	2.70	02

LTP NAME AND SIGNATURE	STRUCTURAL ENG'S NAME AND SIGNATURE	BUILDER NAME AND SIGNATURE	DIGITAL SIGNATURE
ANOOP KUMAR JMP/ENG/0001/2020			Name : SANDIP PASWAN Designation : Executive Officer Organization : CHIRKUNDA

ISO_full_bleed_2A0_(1189.00_x_1682.00_MM)

This is system generated MAP. No need to Physically Signed.

Project Title :SHIVA RANGLAL HEIGHTS

DATE	04-09-2024
SHEET NO.	3
-	

Proposal Basic Information

Proposal File No.	JMP/GH/0004/W05/2024/REV1
Owner Name	M/S RAMA INFRATECH, PARTNER :- (1) ROSHAN LAL GUPTA (2) NAVIN AGARWAL (3) NIRAJ AGARWAL
Khata No	42, 97, & 176
Plot No	402/1,402/2,403,404,405,406,407,409,418,55
Village Name	Jugsalai
Use	Residential
SubUse	Group Housing

ISO_full_bleed_2A0_(1189.00_x_1682.00_MM)

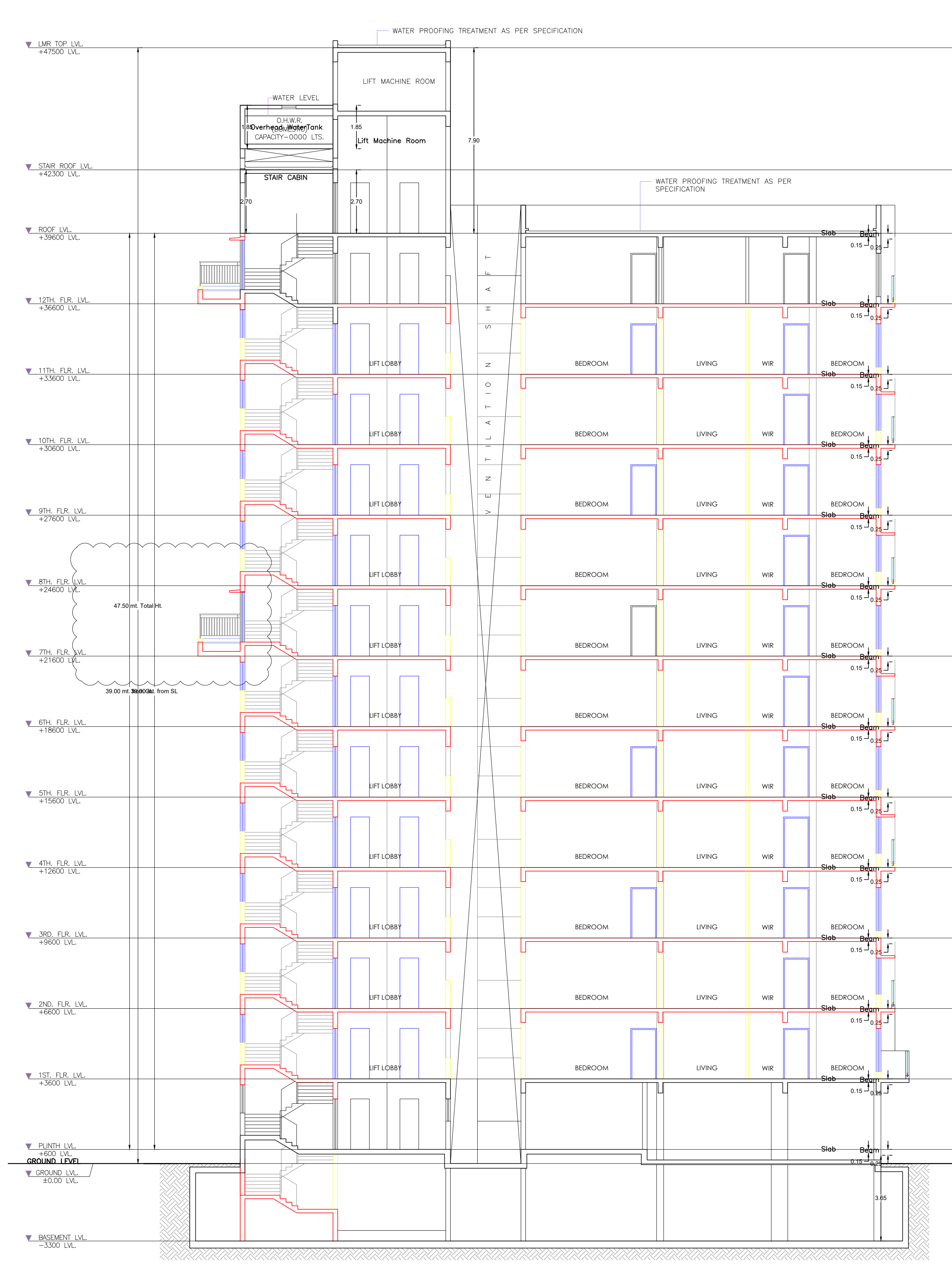
WATER PROOFING TREATMENT AS PER SPECIFICATION
LIFT MACHINE ROOM
WATER LEVEL
STAIR CABIN
LIFT LOBBY
BEDROOM
LIVING
GROUND LEVEL

SECTION AT X–X'

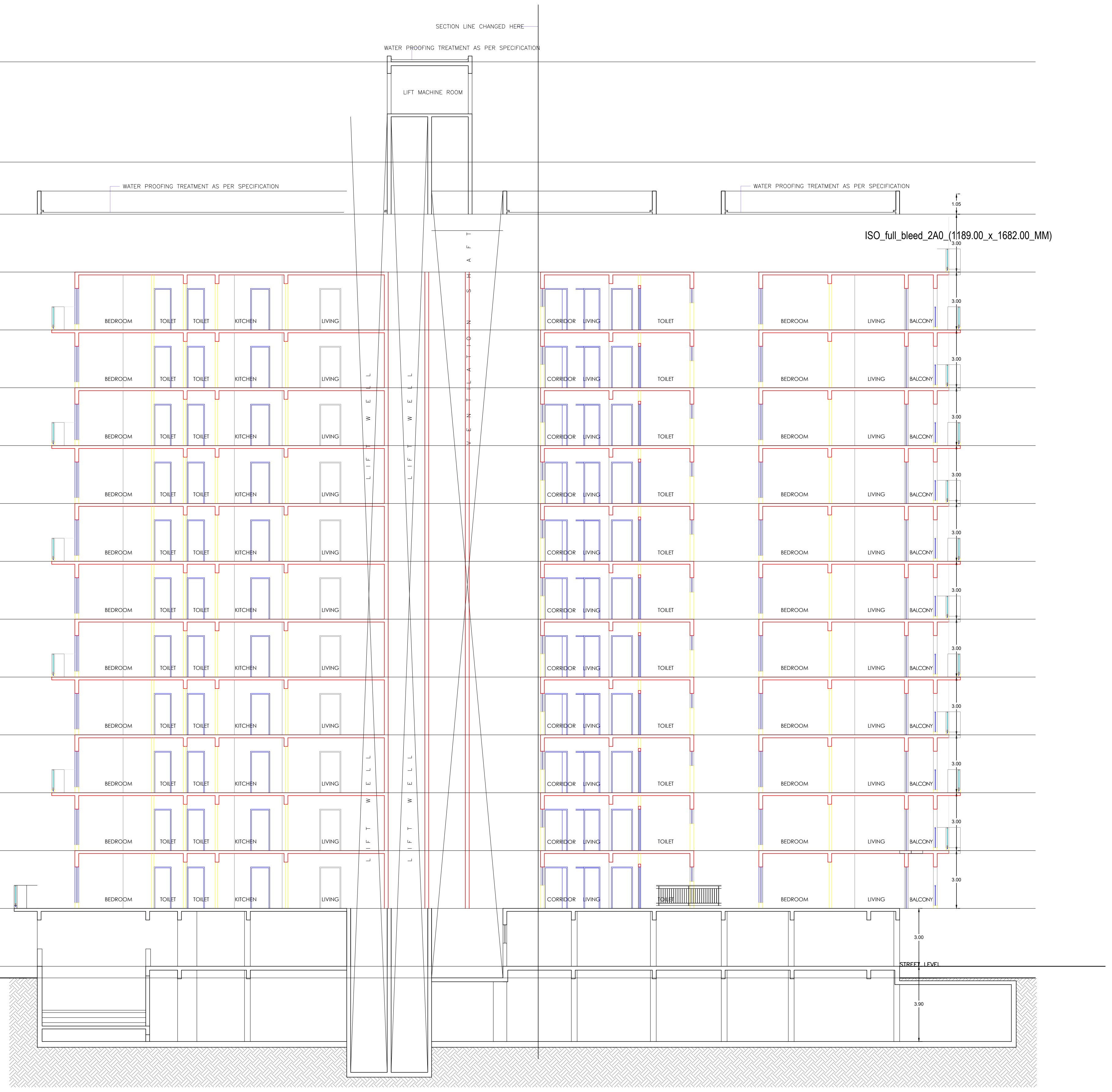
SECTION LINE CHANGED HERE
WATER PROOFING TREATMENT AS PER SPECIFICATION
LIFT MACHINE ROOM
BEDROOM
TOILET
KITCHEN
LIVING
CORRIDOR
BALCONY
STREET LEVEL

SECTION AT Y–Y'

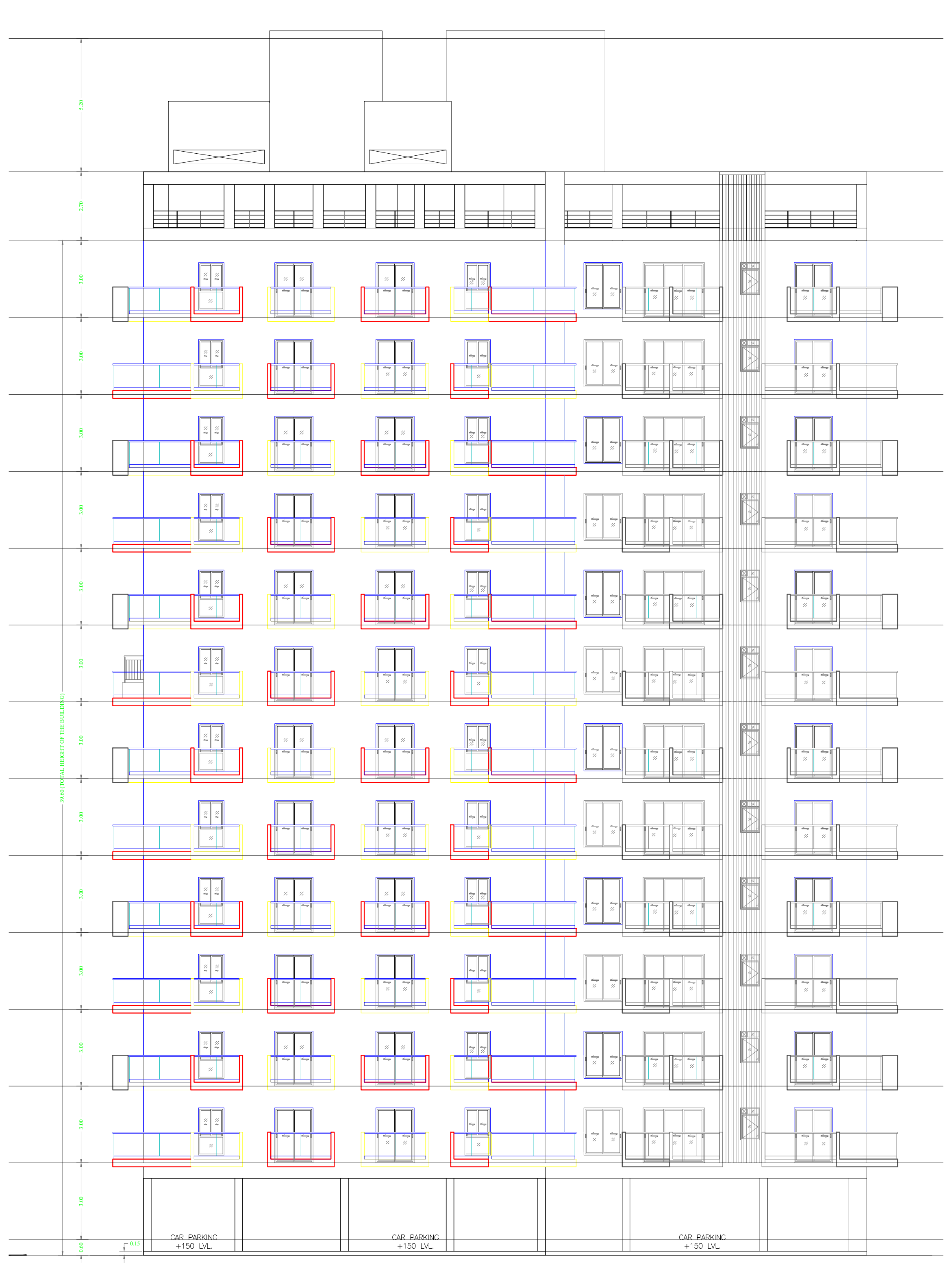
CAR PARKING

FRONT ELEVATION

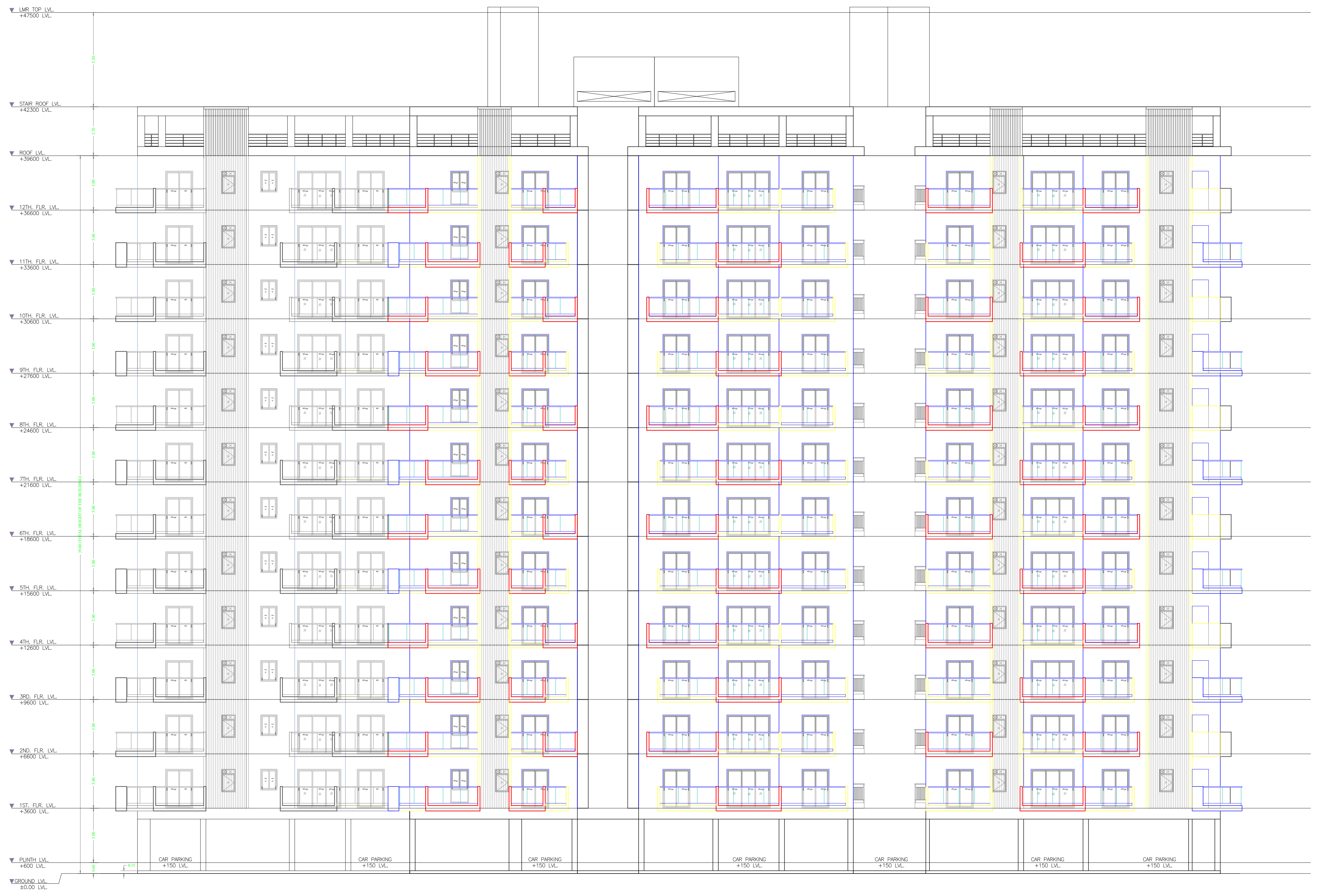
STAIR ROOF LVL
ROOF LVL
PLINTH LVL
GROUND LVL
CAR PARKING

LTP NAME AND SIGNATURE	STRUCTURAL ENG'S NAME AND SIGNATURE	BUILDER NAME AND SIGNATURE	DIGITAL SIGNATURE
ANOOP KUMAR JMP/ENG/0001/2020			

Name : SANDIP PASWAN
Designation : Executive Officer
Organization : CHIRKUNDA

This is system generated MAP. No need to Physically Signed.

Project Title :SHIVA RANGLAL HEIGHTS

DATE	04-09-2024
SHEET NO.	4
-	

Proposal Basic Information

Proposal File No.	JMP/GH/0004/W05/2024/REV1
Owner Name	M/S RAMA INFRATECH, PARTNER :- (1) ROSHAN LAL GUPTA (2) NAVIN AGARWAL (3) NIRAJ AGARWAL
Khata No	42, 97, & 176
Plot No	402/1,402/2,403,404,405,406,407,409,418,55
Village Name	Jugsalai
Use	Residential
SubUse	Group Housing

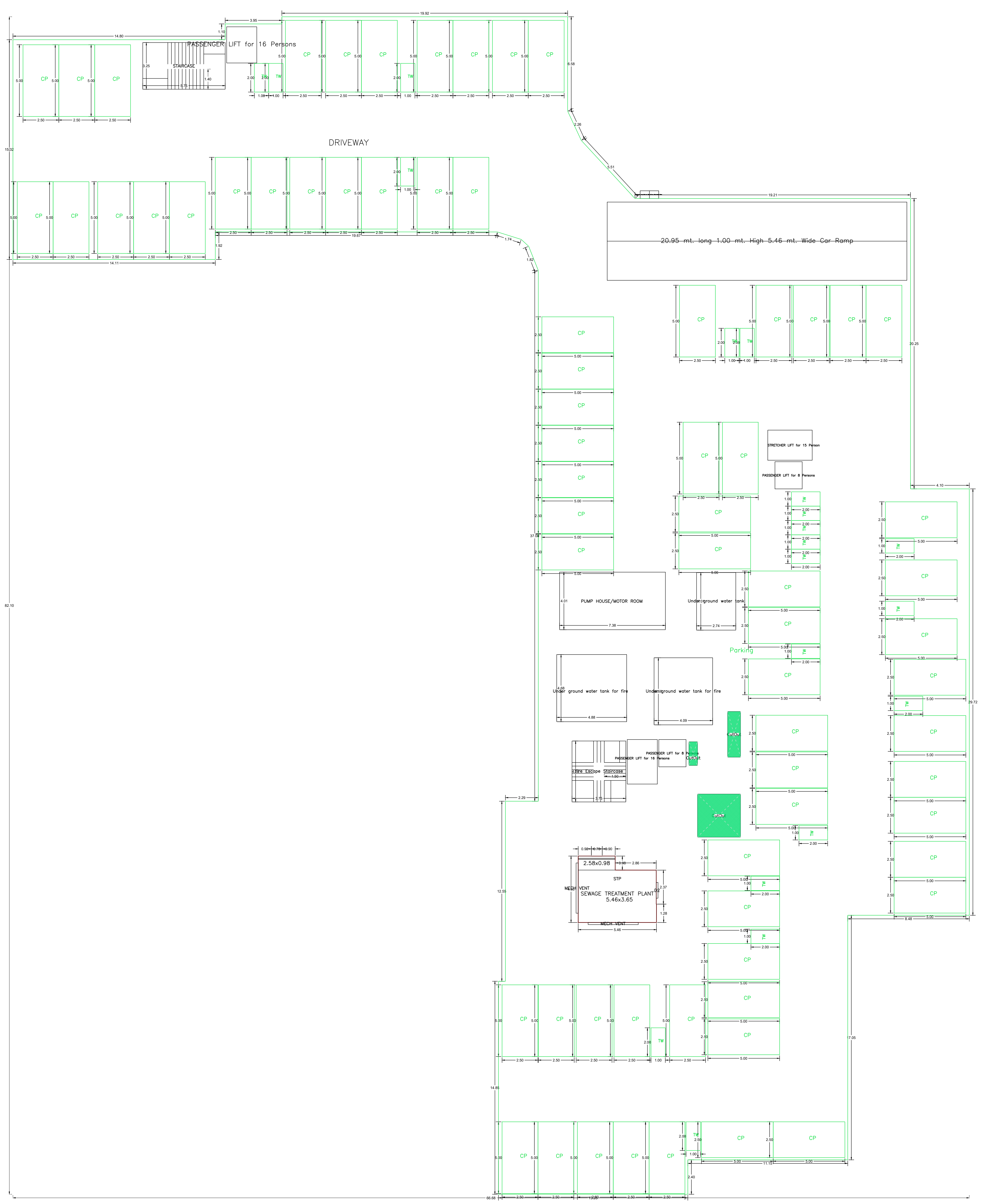
DRIVEWAY
PASSENGER LIFT for 16 Persons
STAIRCASE
CP
20.95 mt. long 1.00 mt. High 5.46 mt. Wide Car Ramp
PUMP HOUSE/MOTOR ROOM
Underground water tank
Parking
Under ground water tank for fire
Underground water tank for fire
PASSENGER LIFT for 16 Persons
STRETCHER LIFT for 15 Persons
PASSENGER LIFT for 8 Persons
STP
SEWAGE TREATMENT PLANT 5.46x3.65
MECH VENT

BASEMENT FLOOR PLAN
(Proposed)
(SCALE 1:100)

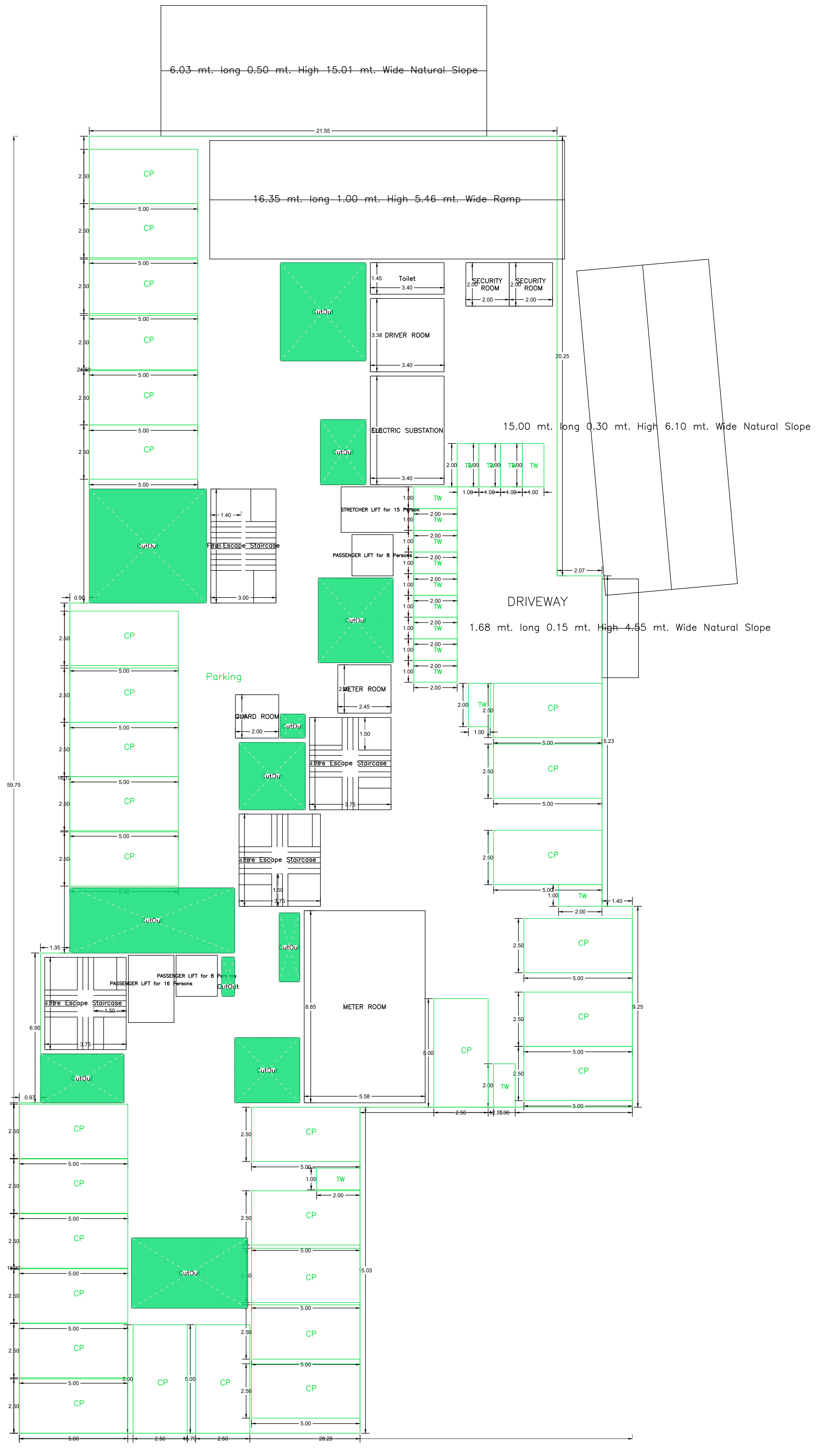
6.03 mt. long 0.50 mt. High 15.01 mt. Wide Natural Slope
16.35 mt. long 1.00 mt. High 5.46 mt. Wide Ramp
Toilet
SECURITY ROOM
DRIVER ROOM
ELECTRIC SUBSTATION
15.00 mt. long 0.30 mt. High 6.10 mt. Wide Natural Slope
STRETCHER LIFT for 15 Persons
PASSENGER LIFT for 8 Persons
DRIVEWAY
1.68 mt. long 0.15 mt. High 4.65 mt. Wide Natural Slope
METER ROOM
Parking
GUARD ROOM
PASSENGER LIFT for 16 Persons
CP
TW

GROUND FLOOR PLAN
(SCALE 1:100)

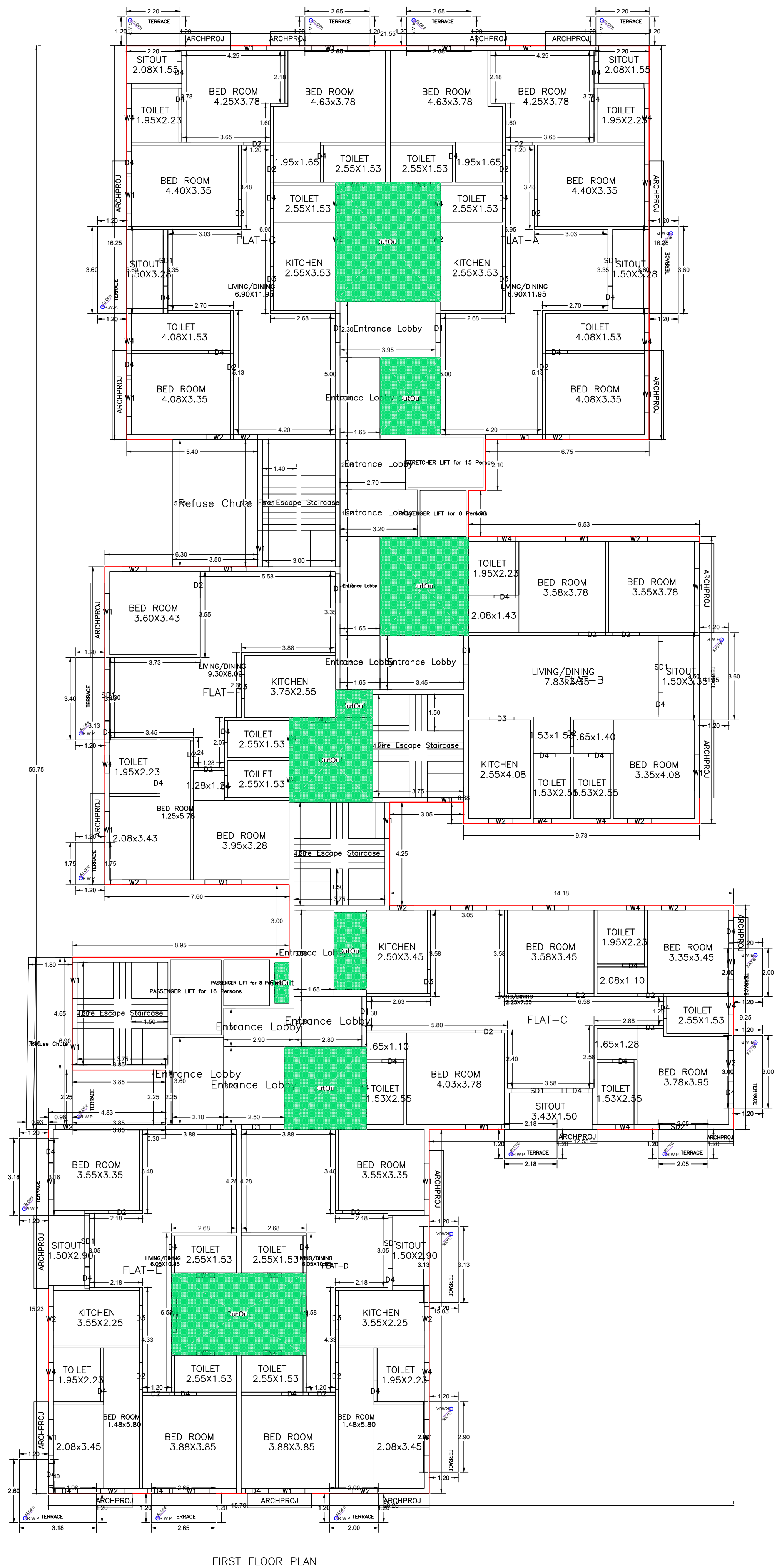
SITOUT
BED ROOM
TOILET
KITCHEN
LIVING/DINING
FLAT-D
FLAT-A
FLAT-B
FLAT-C
FLAT-E
FLAT-F
Entrance Lobby
Refuse Chute
ARCHPROJ
TERRACE

FIRST FLOOR PLAN
(Proposed)
(SCALE 1:100)

LTP NAME AND SIGNATURE	STRUCTURAL ENG'S NAME AND SIGNATURE	BUILDER NAME AND SIGNATURE	DIGITAL SIGNATURE
ANOOP KUMAR JMP/ENG/0001/2020			

Name : SANDIP PASWAN
Designation : Executive Officer
Organization : CHIRKUNDA

This is system generated MAP. No need to Physically Signed.

Project Title :SHIVA RANGLAL HEIGHTS

DATE	04-09-2024
SHEET NO.	5
	-

Proposal Basic Information

Proposal File No.	JMP/GH/0004/W05/2024/REV1
Owner Name	M/S RAMA INFRATECH, PARTNER :- (1) ROSHAN LAL GUPTA (2) NAVIN AGARWAL (3) NIRAJ AGARWAL
Khata No	42, 97, & 176
Plot No	402/1,402/2,403,404,405,406,407,409,418,55
Village Name	Jugsalai
Use	Residential
SubUse	Group Housing

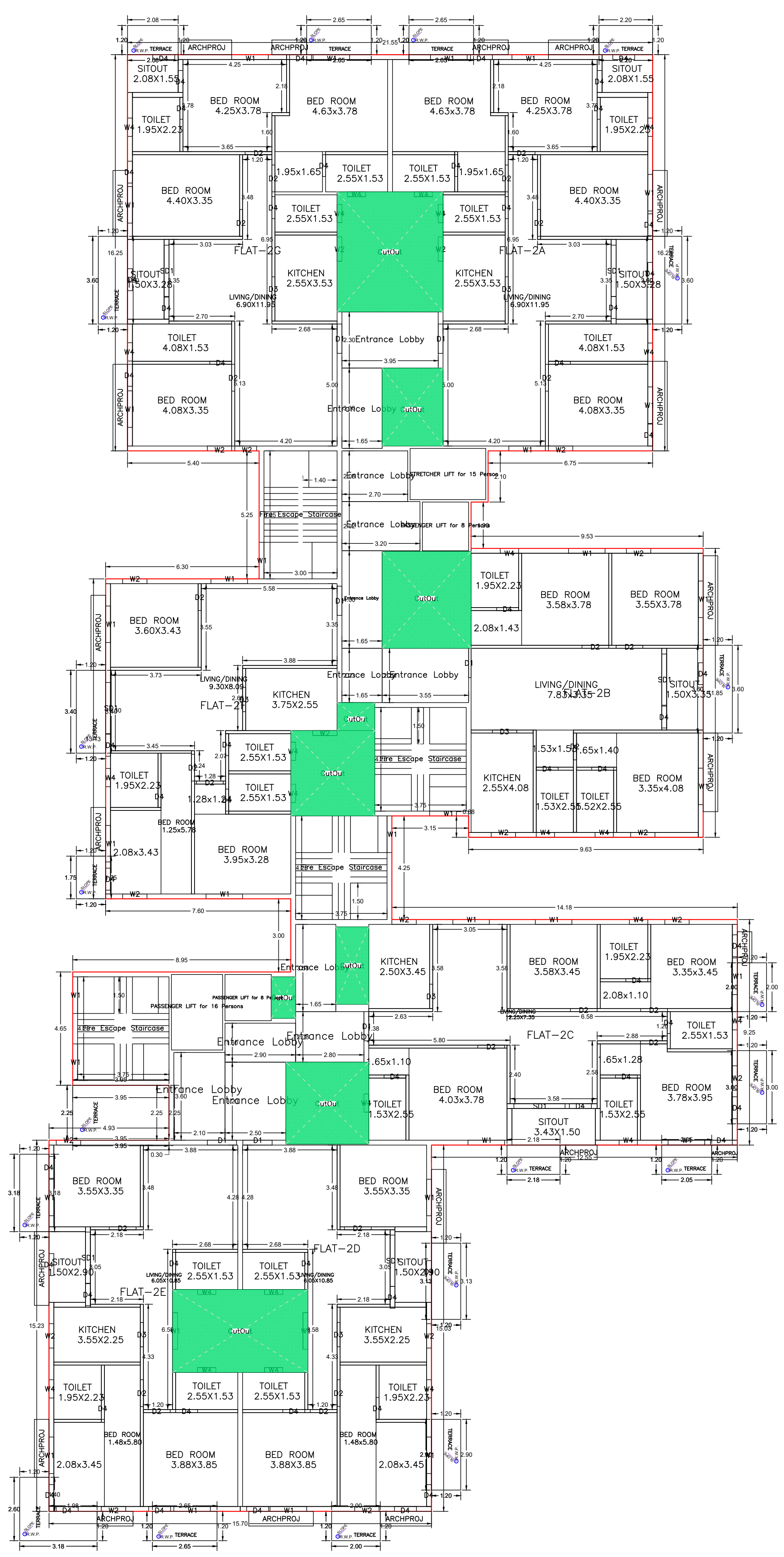
FLAT-2A
FLAT-2B
FLAT-2C
FLAT-2D
FLAT-2E
FLAT-2G
BED ROOM
TOILET
KITCHEN
LIVING/DINING
SITOUT
Entrance Lobby
TERRACE
ARCHPROJ

TYPICAL – 3, 5, 9 & 11 FLOOR PLAN
(Proposed)
(SCALE 1:100)

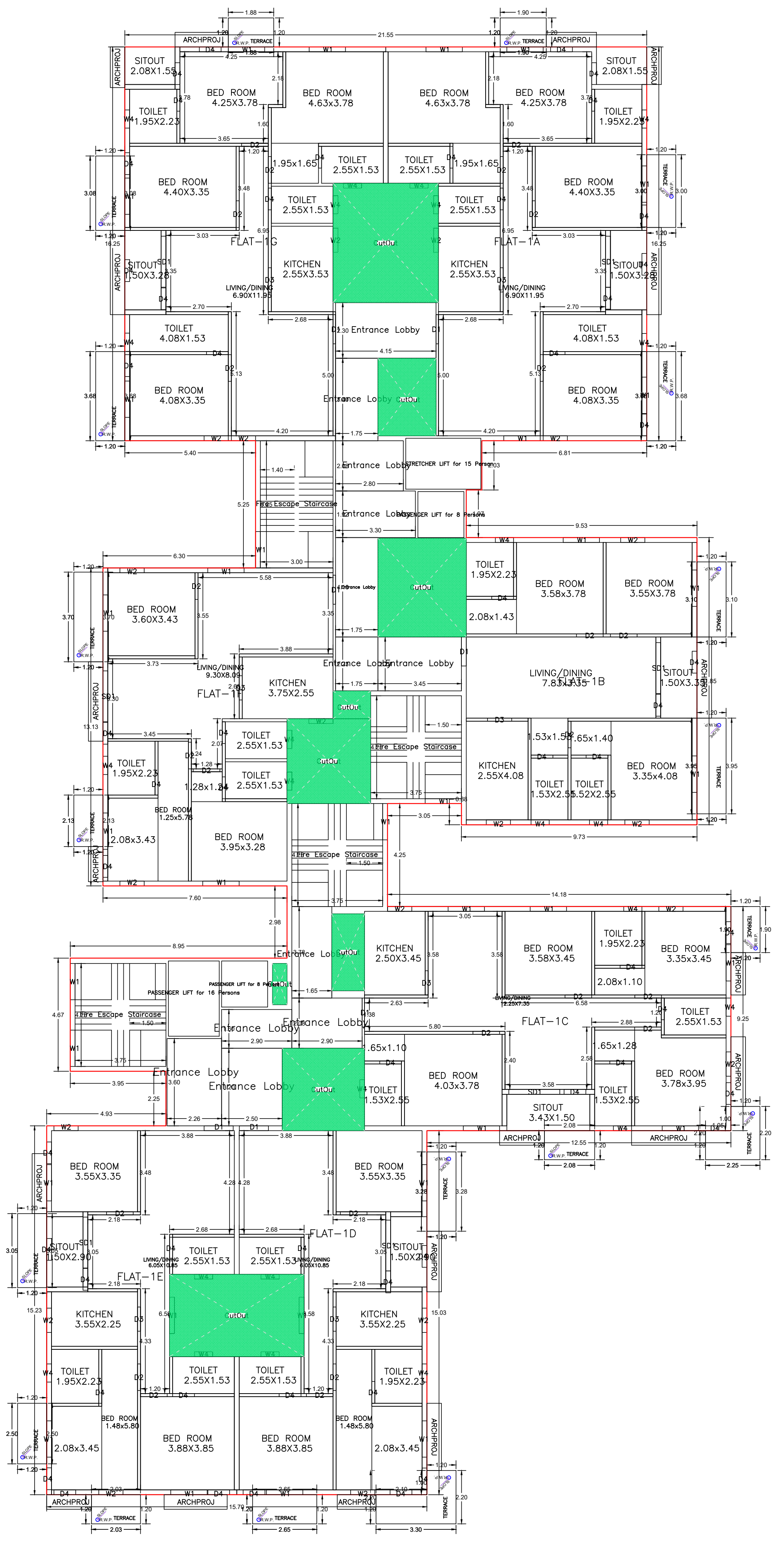
FLAT-1A
FLAT-1B
FLAT-1C
FLAT-1D
FLAT-1E
FLAT-1G
BED ROOM
TOILET
KITCHEN
LIVING/DINING
SITOUT
Entrance Lobby
TERRACE
ARCHPROJ

TYPICAL – 2, 4, 6, 8 & 10 FLOOR PLAN
(Proposed)
(SCALE 1:100)

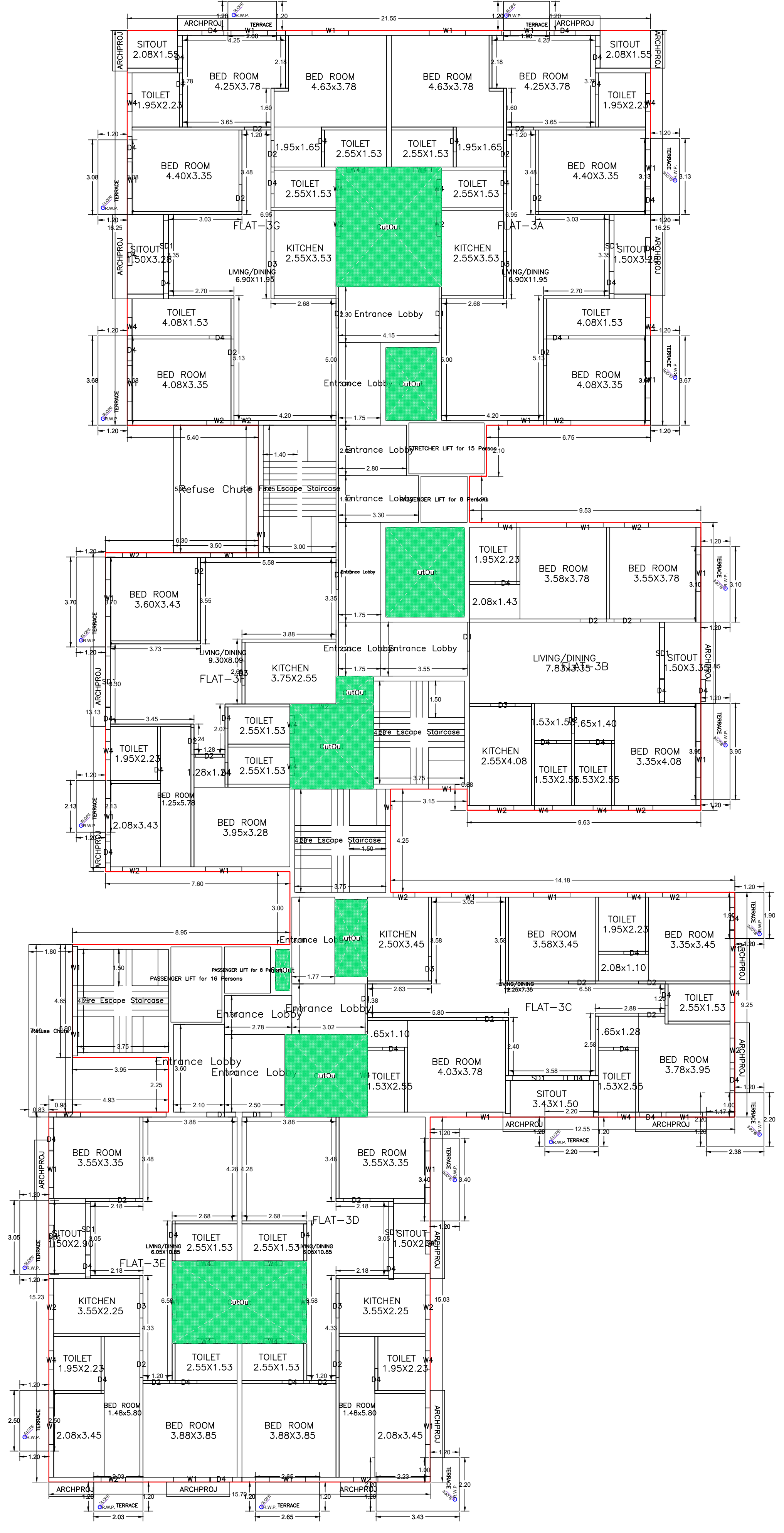
FLAT-3A
FLAT-3B
FLAT-3C
FLAT-3D
FLAT-3E
FLAT-3G
BED ROOM
TOILET
KITCHEN
LIVING/DINING
SITOUT
Entrance Lobby
Refuse Chute
TERRACE
ARCHPROJ

TYPICAL – 7 & 12 FLOOR PLAN
(Proposed)
(SCALE 1:100)

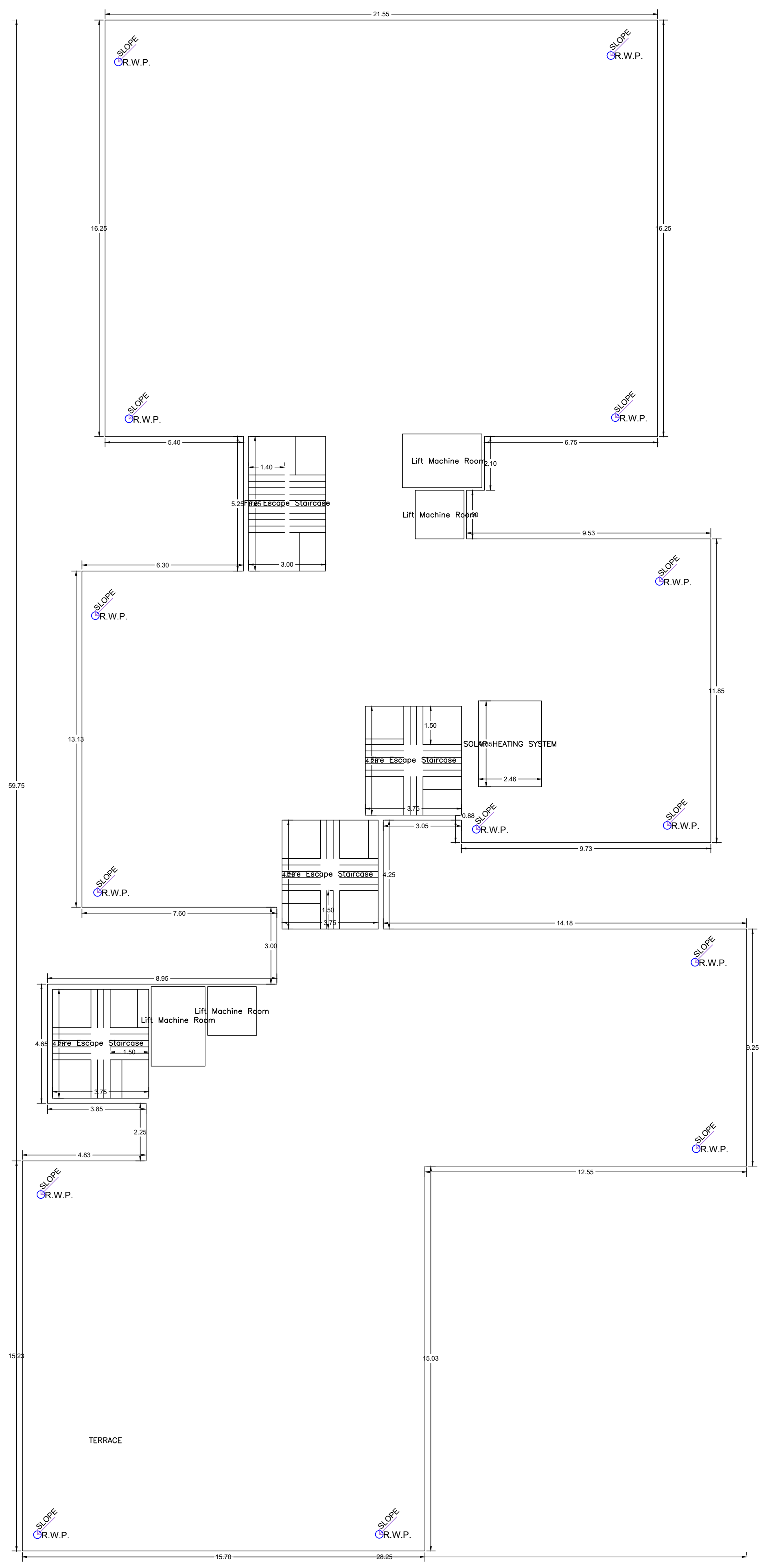
R.W.P.
SLOPE
Lift Machine Room
SOLAR HEATING SYSTEM
TERRACE

TERRACE FLOOR PLAN
(SCALE 1:100)

Building :A (APARTMENT BLOCK)

Floor Name	Gross Builtup Area	Deductions From Gross BUA(Area in Sq.mt.)	Total Built Up Area (Sq.mt.)	Existing Built Up Area (Sq.mt.)	Proposed Built Up Area (Sq.mt.)	Deductions (Area in Sq.mt.)					Proposed FAR Area (Sq.mt.)		Add Area In FAR (Sq.mt.)	Total FAR Area (Sq.mt.)	Total Consumed Additional FAR Area (Sq.mt.)	Tnmt (No.)
		Cutout				StairCase	Lift	Accessory Use	Ramp	Parking	Resi.	Hazardous	Stair			
Basement Floor	2472.81	12.84	2459.97	0.22	2459.75	15.94	25.53	29.62	0.00	2233.78	0.00	22.39	18.69	41.08	41.08	01
Ground Floor	1383.34	138.64	1244.70	0.00	1244.70	63.56	0.00	100.19	89.19	971.52	0.00	0.00	0.00	20.24	20.24	00
First Floor	1160.23	93.93	1066.30	0.00	1066.30	63.56	20.24	76.48	0.00	0.00	906.02	0.00	0.00	906.02	906.02	07
Second Floor	1160.01	93.57	1066.44	0.00	1066.44	63.56	20.24	79.41	0.00	0.00	903.23	0.00	0.00	903.23	903.23	07
Third Floor	1159.91	94.09	1065.82	0.00	1065.82	63.56	20.43	76.69	0.00	0.00	905.14	0.00	0.00	905.14	905.14	07
Fourth Floor	1160.01	93.57	1066.44	0.00	1066.44	63.56	20.24	79.41	0.00	0.00	903.23	0.00	0.00	903.23	903.23	07
Fifth Floor	1159.91	94.09	1065.82	0.00	1065.82	63.56	20.43	76.69	0.00	0.00	905.14	0.00	0.00	905.14	905.14	07
Sixth Floor	1160.01	93.57	1066.44	0.00	1066.44	63.56	20.24	79.41	0.00	0.00	903.23	0.00	0.00	903.23	903.23	07
Seventh Floor	1159.90	89.34	1070.56	0.00	1070.56	63.56	20.24	79.22	0.00	0.00	907.54	0.00	0.00	907.54	907.54	07
Eighth Floor	1160.01	93.57	1066.44	0.00	1066.44	63.56	20.24	79.41	0.00	0.00	903.23	0.00	0.00	903.23	903.23	07
Ninth Floor	1159.91	94.09	1065.82	0.00	1065.82	63.56	20.43	76.69	0.00	0.00	905.14	0.00	0.00	905.14	905.14	07
Tenth Floor	1160.01	93.57	1066.44	0.00	1066.44	63.56	20.24	79.41	0.00	0.00	903.23	0.00	0.00	903.23	903.23	07
Eleventh Floor	1159.91	94.09	1065.82	0.00	1065.82	63.56	20.43	76.69	0.00	0.00	905.14	0.00	0.00	905.14	905.14	07
Twelfth Floor	1159.90	89.34	1070.56	0.00	1070.56	63.56	20.24	79.22	0.00	0.00	907.54	0.00	0.00	907.54	907.54	07
Terrace Floor	0.00	0.00	0.00	0.00	0.00	0.00	0.00	0.00	0.00	0.00	0.00	0.00	0.00	0.00	0.00	00
Total :	17775.87	1268.30	16507.57	0.22	16507.35	842.22	269.17	1068.54	89.19	3205.31	10857.81	22.39	18.69	10919.13	10919.13	85
Total Number of Same Buildings :	1															
Total :	17775.87	1268.30	16507.57	0.22	16507.35	842.22	269.17	1068.54	89.19	3205.31	10857.81	22.39	18.69	10919.13	10919.13	85

UnitBUA Table for Building :A (APARTMENT BLOCK)

FLOOR	Name	UnitBUA Type	UnitBUA Area	Carpet Area	No. of Rooms	No. of Tenement
BASEMENT FLOOR PLAN	STP	OTHER	22.39	22.21	1	1
TYPICAL - 7 & 12 FLOOR PLAN	FLAT-3A	FLAT	145.74	138.49	12	14
	FLAT-3B	FLAT	107.44	102.40	9	
	FLAT-3C	FLAT	132.81	124.95	11	
	FLAT-3D	FLAT	103.42	98.07	9	
	FLAT-3E	FLAT	103.42	98.59	9	
	FLAT-3F	FLAT	105.61	100.77	8	
	FLAT-3G	FLAT	145.82	138.06	12	
TYPICAL - 3, 5, 9 & 11 FLOOR PLAN	FLAT-2A	FLAT	145.74	137.74	12	28
	FLAT-2B	FLAT	107.44	101.88	9	
	FLAT-2C	FLAT	132.77	124.92	11	
	FLAT-2D	FLAT	103.42	98.07	9	
	FLAT-2E	FLAT	103.42	98.33	9	
	FLAT-2F	FLAT	105.61	100.77	8	
	FLAT-2G	FLAT	145.78	138.26	12	
TYPICAL - 2, 4, 6, 8 & 10 FLOOR PLAN	FLAT-1A	FLAT	145.76	137.94	12	35
	FLAT-1B	FLAT	107.44	101.88	9	
	FLAT-1C	FLAT	132.77	124.92	11	
	FLAT-1D	FLAT	103.42	98.07	9	
	FLAT-1E	FLAT	103.42	98.63	9	
	FLAT-1F	FLAT	105.61	101.43	8	
	FLAT-1G	FLAT	145.84	138.36	12	
FIRST FLOOR PLAN	FLAT-A	FLAT	145.74	137.74	12	7
	FLAT-B	FLAT	107.45	105.53	9	
	FLAT-C	FLAT	132.77	125.45	11	
	FLAT-D	FLAT	103.42	98.07	9	
	FLAT-E	FLAT	103.42	98.59	9	
	FLAT-F	FLAT	105.61	101.67	8	
	FLAT-G	FLAT	145.74	137.74	12	
Total:	-	-	10153.08	9635.74	841	85

SCHEDULE OF DOOR:

BUILDING NAME	NAME	LENGTH	HEIGHT	NOS
A (APARTMENT BLOCK)	D4	0.90	2.13	638
A (APARTMENT BLOCK)	D3	1.00	2.13	84
A (APARTMENT BLOCK)	D2	1.10	2.13	289
A (APARTMENT BLOCK)	D1	1.20	2.13	84

SCHEDULE OF WINDOW/VENTILATION:

BUILDING NAME	NAME	LENGTH	HEIGHT	NOS
A (APARTMENT BLOCK)	W4	0.75	2.70	288
A (APARTMENT BLOCK)	W2	0.90	2.70	06
A (APARTMENT BLOCK)	W2	1.00	2.70	222
A (APARTMENT BLOCK)	W1	1.50	2.70	397
A (APARTMENT BLOCK)	SD2	1.50	2.70	01
A (APARTMENT BLOCK)	W1	1.60	2.70	06
A (APARTMENT BLOCK)	W1	1.62	2.70	02
A (APARTMENT BLOCK)	W1	1.64	2.70	02
A (APARTMENT BLOCK)	SD1	2.10	2.70	84
A (APARTMENT BLOCK)	MECH VENT	3.50	2.70	02

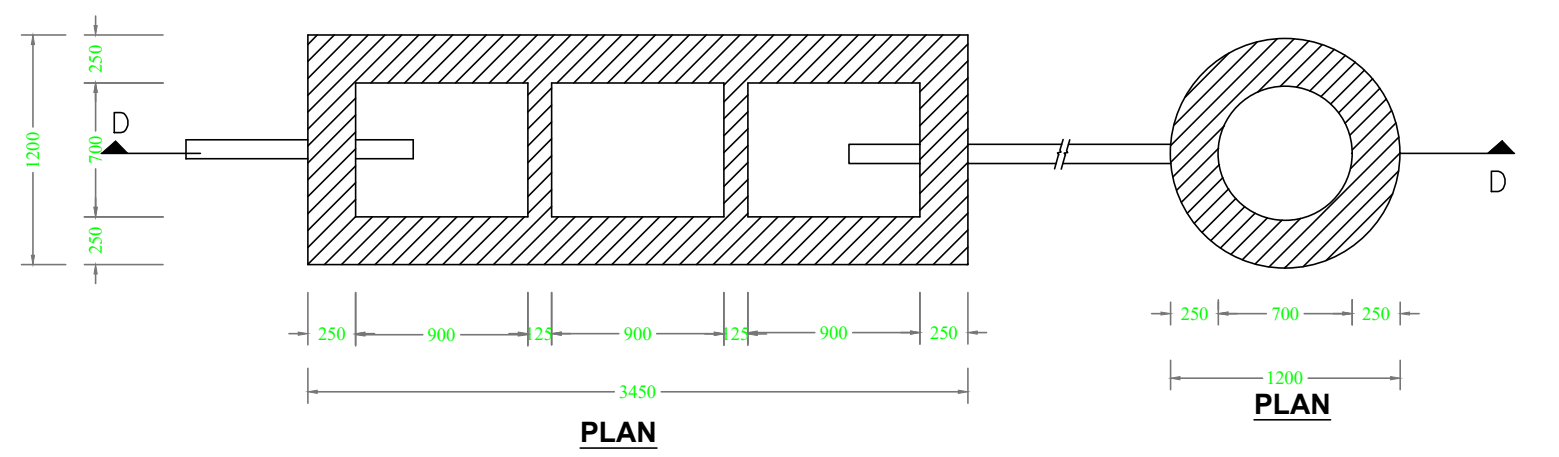
D
D
250
700
1200
900
125
3450
PLAN
PLAN

DETAIL OF SEPTIC TANK & SOAKPIT.

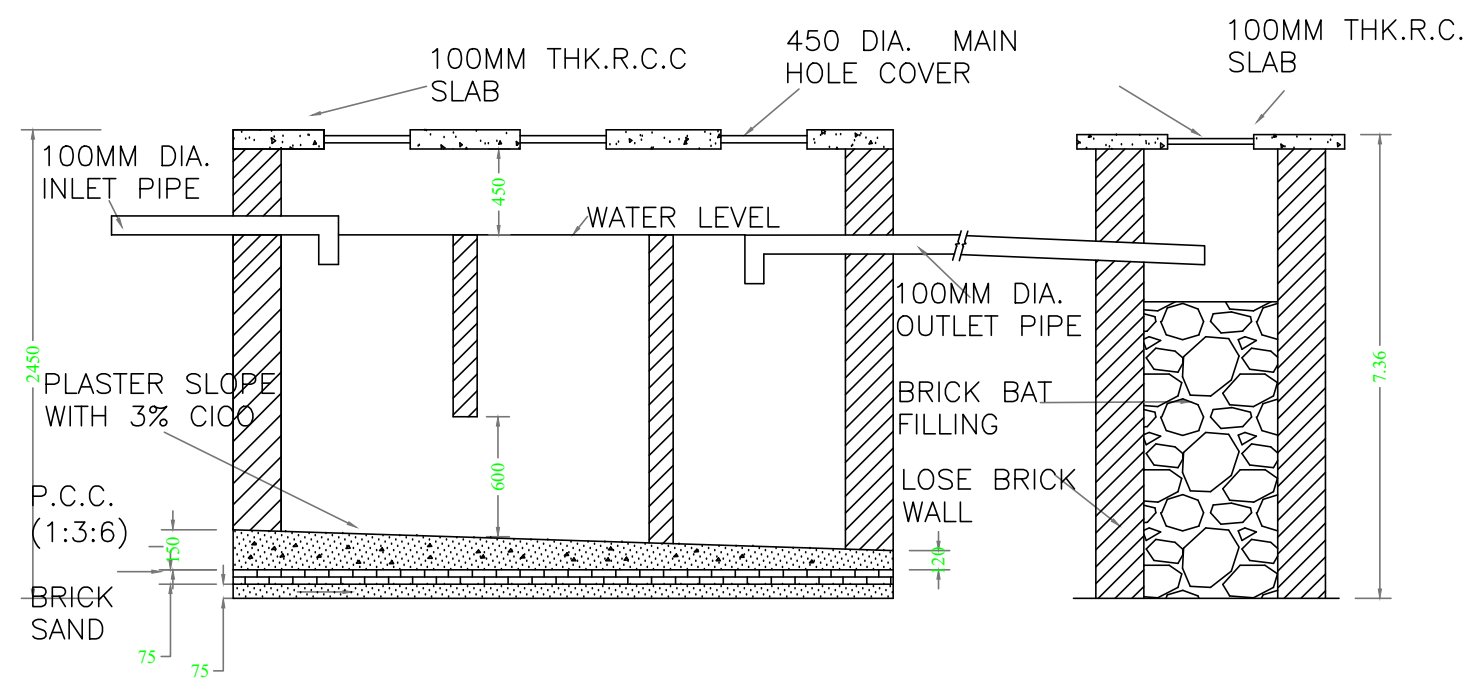
100MM THK.R.C.C SLAB
450 DIA. MAIN HOLE COVER
100MM THK.R.C.C SLAB
100MM DIA. INLET PIPE
WATER LEVEL
100MM DIA. OUTLET PIPE
PLASTER SLOPE WITH 3% CICO
BRICK BAT FILLING
LOSE BRICK WALL
P.C.C. (1:3:6)
BRICK
SAND
450
600
2450
150
120
75
7.36

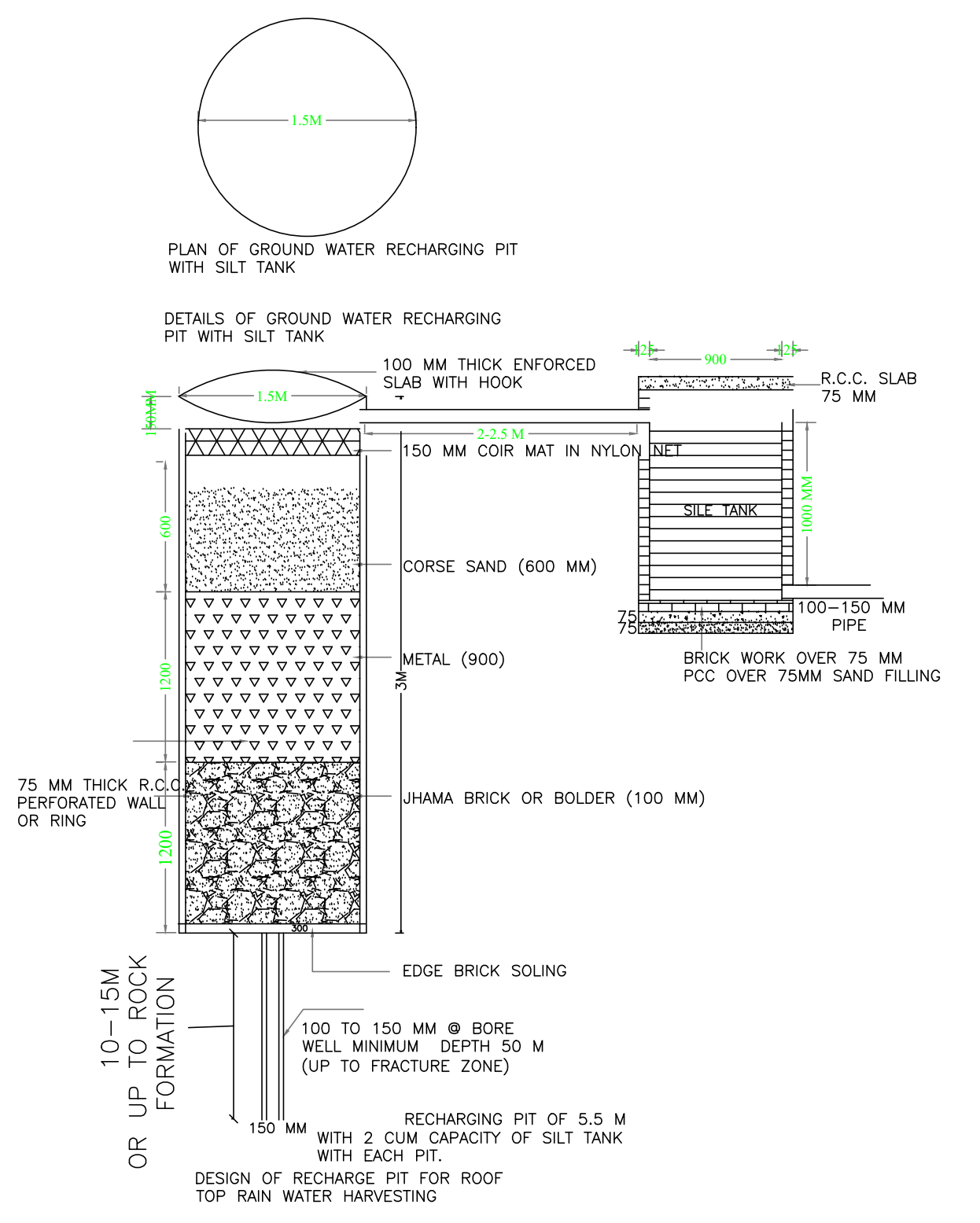
1.5M
PLAN OF GROUND WATER RECHARGING PIT WITH SILT TANK
DETAILS OF GROUND WATER RECHARGING PIT WITH SILT TANK
100 MM THICK ENFORCED SLAB WITH HOOK
R.C.C. SLAB 75 MM
150 MM COIR MAT IN NYLON NET
SILE TANK
1000 MM
2-2.5 M
900
125
CORSE SAND (600 MM)
100–150 MM PIPE
BRICK WORK OVER 75 MM PCC OVER 75MM SAND FILLING
METAL (900)
3M
75 MM THICK R.C.C. PERFORATED WALL OR RING
JHAMA BRICK OR BOLDER (100 MM)
600
1200
300
EDGE BRICK SOLING
10–15M OR UP TO ROCK FORMATION
100 TO 150 MM @ BORE WELL MINIMUM DEPTH 50 M (UP TO FRACTURE ZONE)
150 MM
RECHARGING PIT OF 5.5 M WITH 2 CUM CAPACITY OF SILT TANK WITH EACH PIT.
DESIGN OF RECHARGE PIT FOR ROOF TOP RAIN WATER HARVESTING

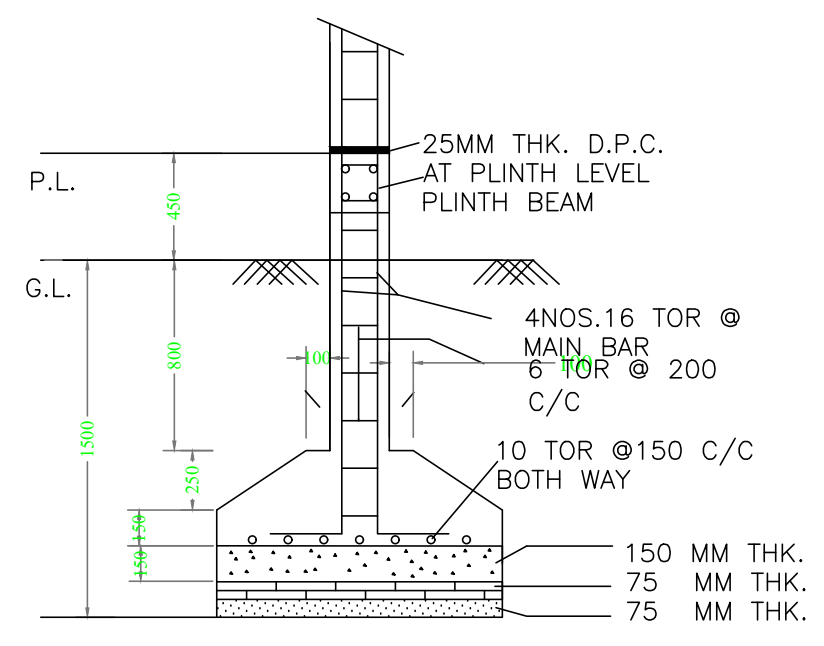
P.L.
G.L.
25MM THK. D.P.C. AT PLINTH LEVEL
PLINTH BEAM
4NOS.16 TOR @ MAIN BAR
6 TOR @ 200 C/C
10 TOR @150 C/C BOTH WAY
150 MM THK. P.C.C. (1:4:8)
75 MM THK. BRICK SOLING.
75 MM THK. SAND FILLING.
450
800
250
1500
150
100

SECTION -CC

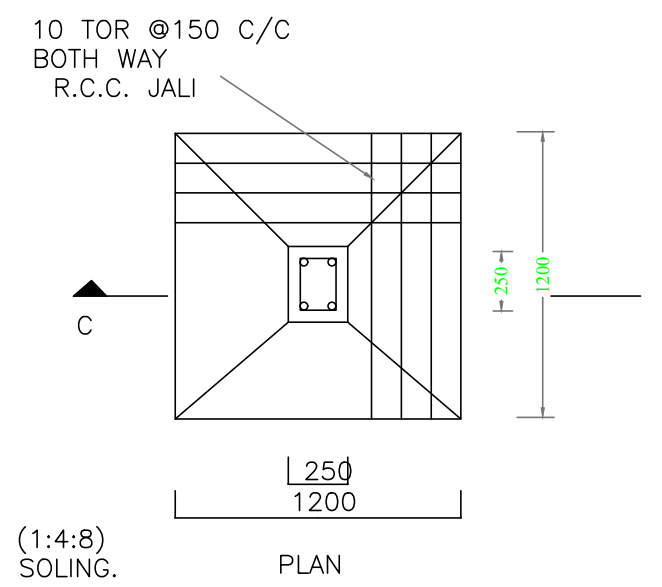
10 TOR @150 C/C BOTH WAY R.C.C. JALI
C
250
1200
PLAN

DETAIL OF FOUNDATION

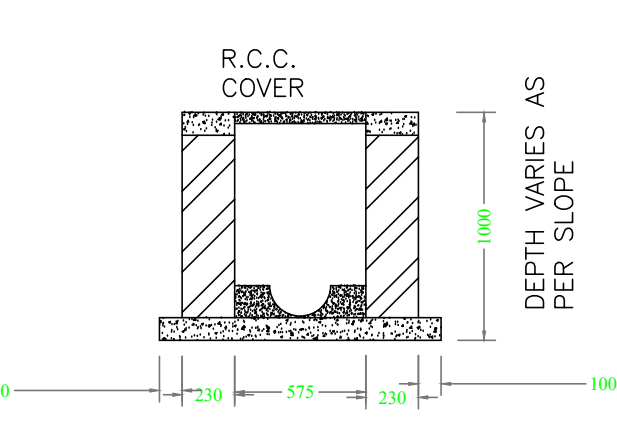
R.C.C. COVER
DEPTH VARIES AS PER SLOPE
1000
100
230
575

SECTION AT 2-2

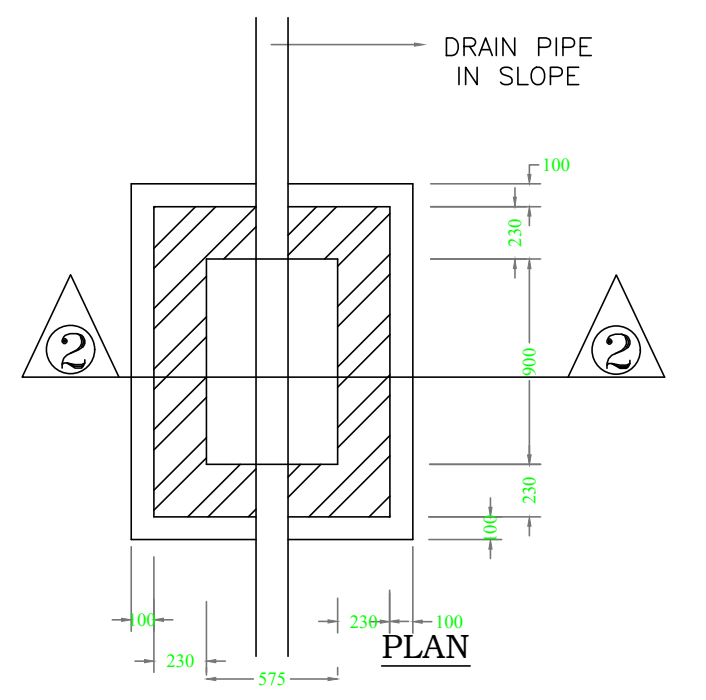
DRAIN PIPE IN SLOPE
2
2
100
230
900
575
PLAN

I.C.DETAILS

LTP NAME AND SIGNATURE	STRUCTURAL ENG'S NAME AND SIGNATURE	BUILDER NAME AND SIGNATURE	DIGITAL SIGNATURE
ANOOP KUMAR JMP/ENG/0001/2020			

Name : SANDIP PASWAN
Designation : Executive Officer
Organization : CHIRKUNDA

This is system generated MAP. No need to Physically Signed.

Project Title :SHIVA RANGLAL HEIGHTS

DATE	17-04-2024
SHEET NO.	1

Proposal Basic Information

Proposal File No.	JMP/GH/0004/W05/2024
Owner Name	M/S RAMA INFRATECH, PARTNER :- (1) ROSHAN LAL GUPTA (2) NAVIN AGARWAL (3) NIRAJ AGARWAL
Khata No	42, 97, & 176
Plot No	402, 403, 404, 405 , 406, 407, 409, 418 & 55
Village Name	Jugsalai
Use	Residential
SubUse	Group Housing

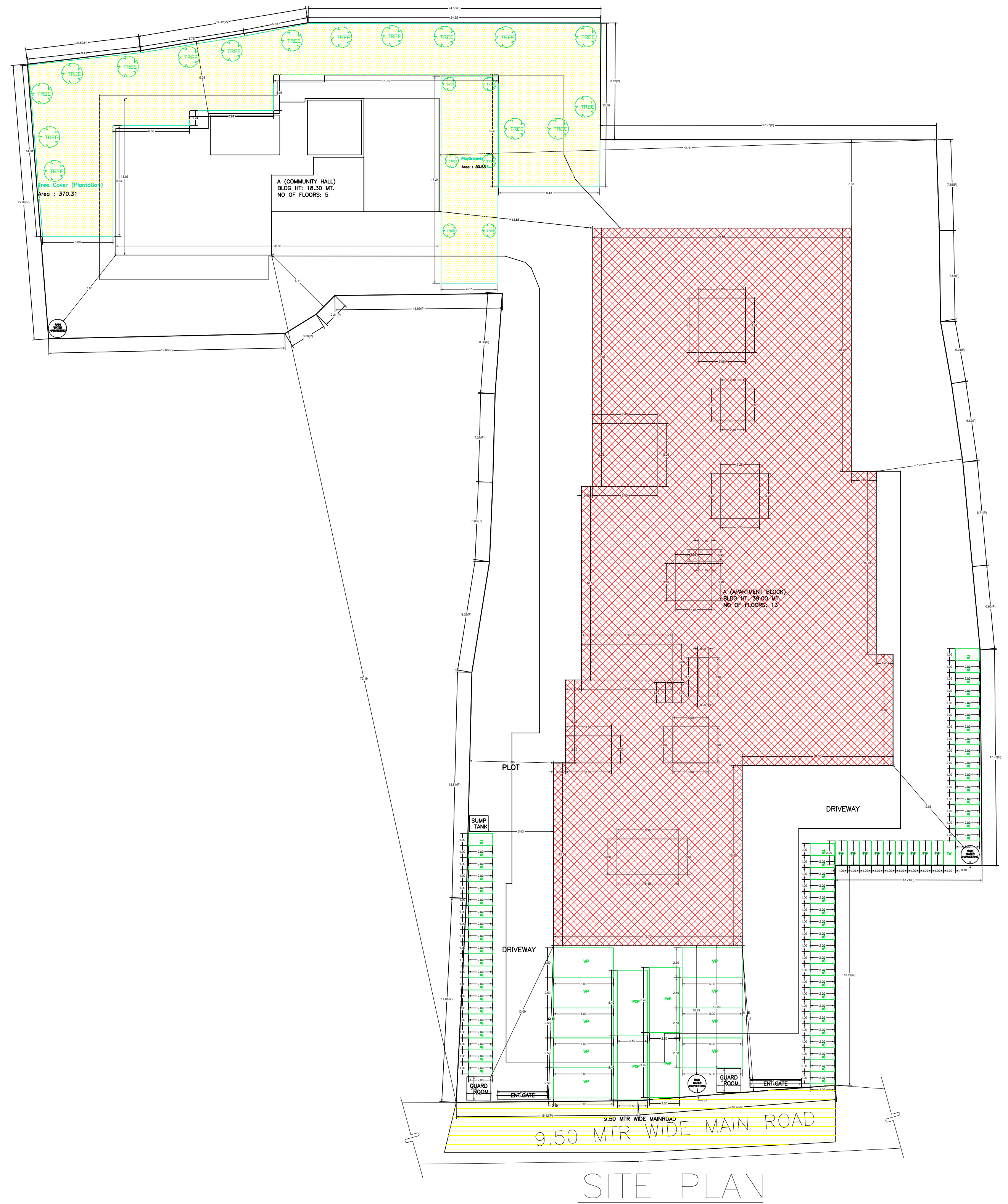
TREE
Tree Cover (Plantation)
Area : 370.31
PlayGrounds
Area : 80.53
A (COMMUNITY HALL)
BLDG HT: 18.30 MT.
NO OF FLOORS: 5
A (APARTMENT BLOCK)
BLDG HT: 39.00 MT.
NO OF FLOORS: 13
PLOT
DRIVEWAY
DRIVEWAY
SUMP TANK
VP
PCP
PVP
GUARD ROOM
ENT.GATE
GUARD ROOM
ENT.GATE
9.50 MTR WIDE MAINROAD
9.50 MTR WIDE MAIN ROAD

SITE PLAN

SITE PLAN

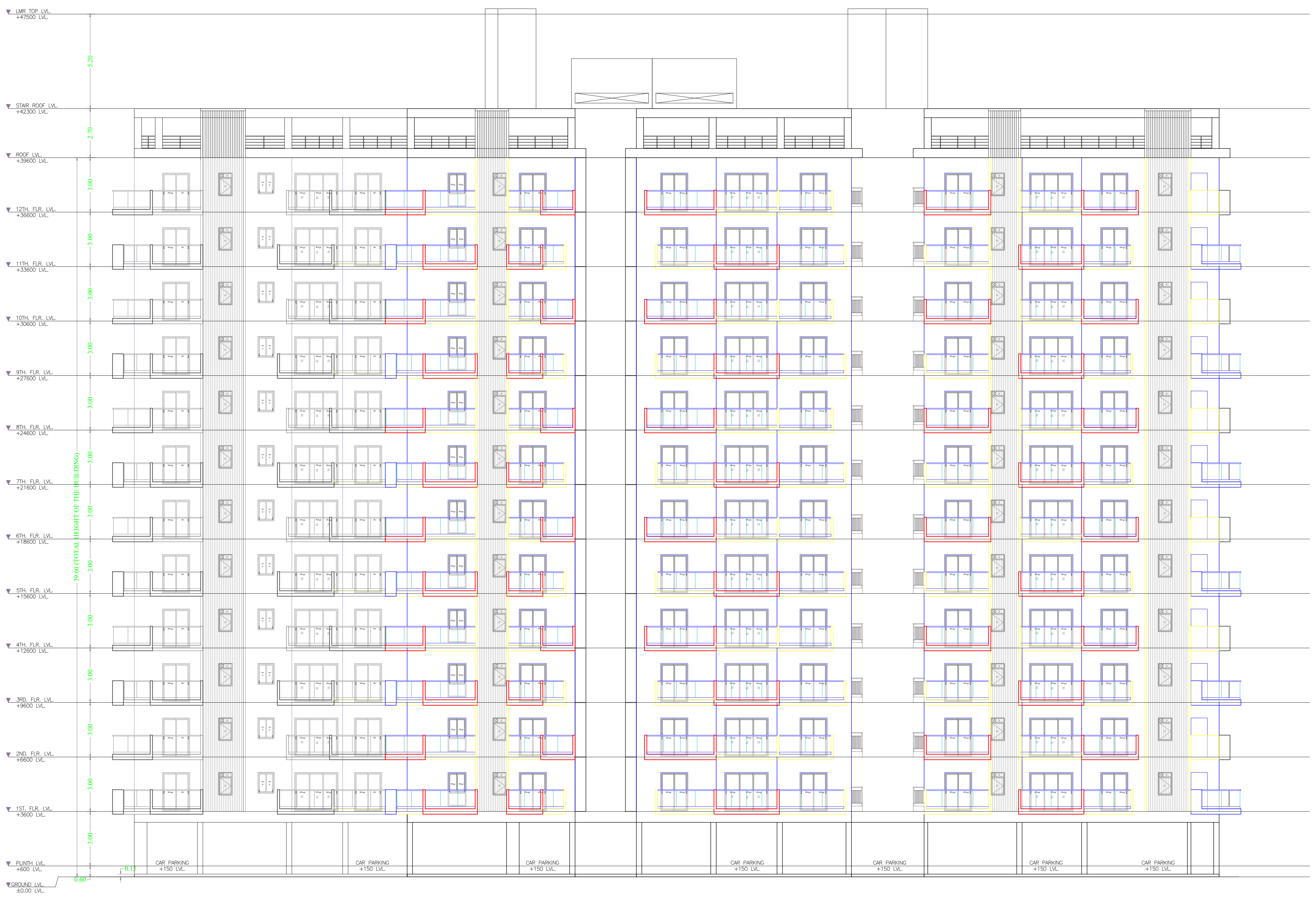
LMR TOP LVL. +47500 LVL.
STAIR ROOF LVL. +42300 LVL.
ROOF LVL. +39600 LVL.
12TH. FLR. LVL. +36600 LVL.
11TH. FLR. LVL. +33600 LVL.
10TH. FLR. LVL. +30600 LVL.
9TH. FLR. LVL. +27600 LVL.
8TH. FLR. LVL. +24600 LVL.
7TH. FLR. LVL. +21600 LVL.
6TH. FLR. LVL. +18600 LVL.
5TH. FLR. LVL. +15600 LVL.
4TH. FLR. LVL. +12600 LVL.
3RD. FLR. LVL. +9600 LVL.
2ND. FLR. LVL. +6600 LVL.
1ST. FLR. LVL. +3600 LVL.
PLINTH LVL. +600 LVL.
GROUND LVL. ±0.00 LVL.
CAR PARKING +150 LVL.

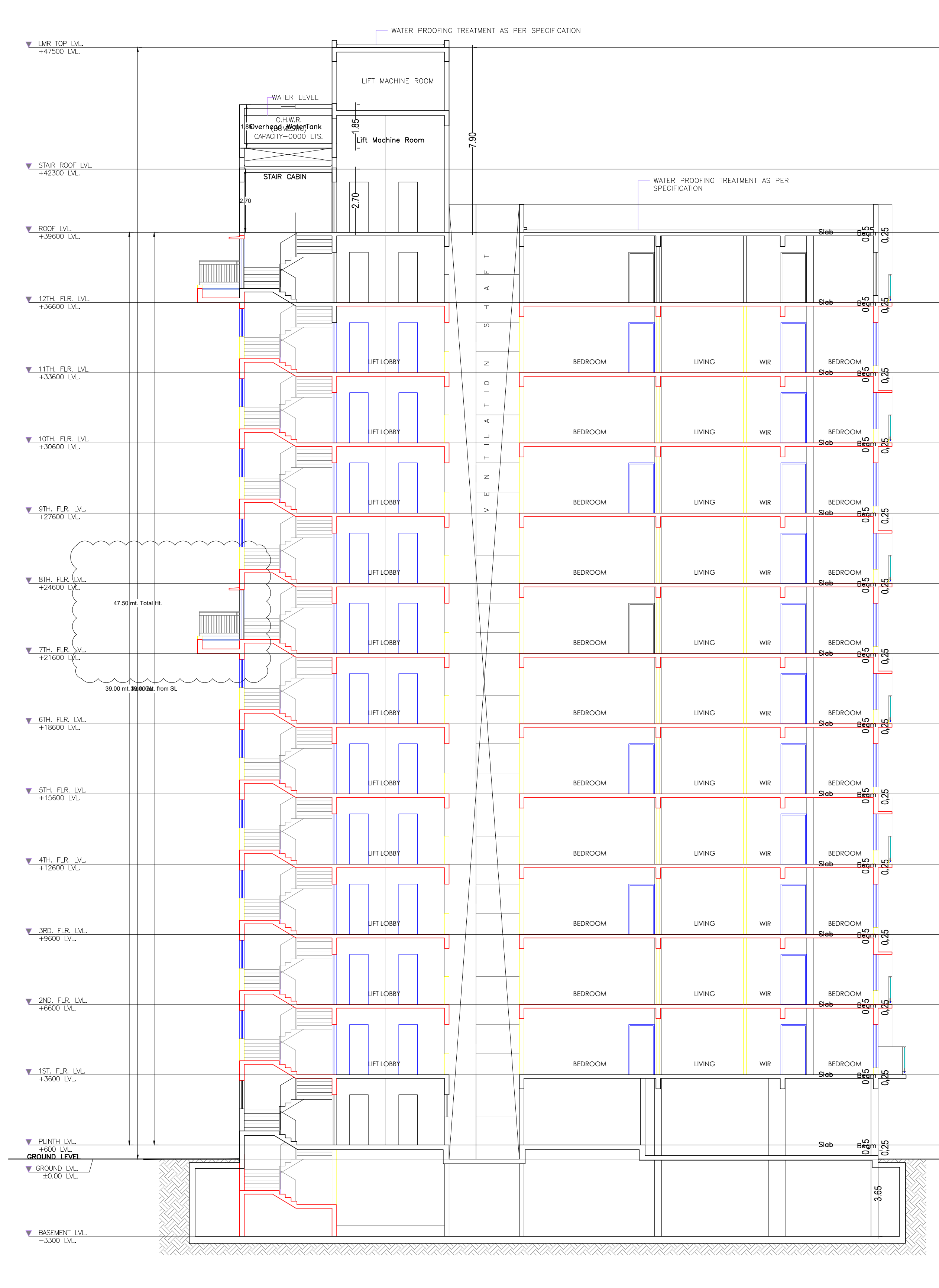
LMR TOP LVL. +47500 LVL.
STAIR ROOF LVL. +42300 LVL.
ROOF LVL. +39600 LVL.
12TH. FLR. LVL. +36600 LVL.
11TH. FLR. LVL. +33600 LVL.
10TH. FLR. LVL. +30600 LVL.
9TH. FLR. LVL.
WATER PROOFING TREATMENT AS PER SPECIFICATION
LIFT MACHINE ROOM
WATER LEVEL
O.H.W.R.
Overhead WaterTank
CAPACITY-0000 LTS.
Lift Machine Room
STAIR CABIN
WATER PROOFING TREATMENT AS PER SPECIFICATION
VENTILATION SHAFT
LIFT LOBBY
BEDROOM
LIVING
WIR
Slab
Beam
7.90
1.85
2.70
GROUND LVL.
BASEMENT LVL.

SECTION AT X–X'

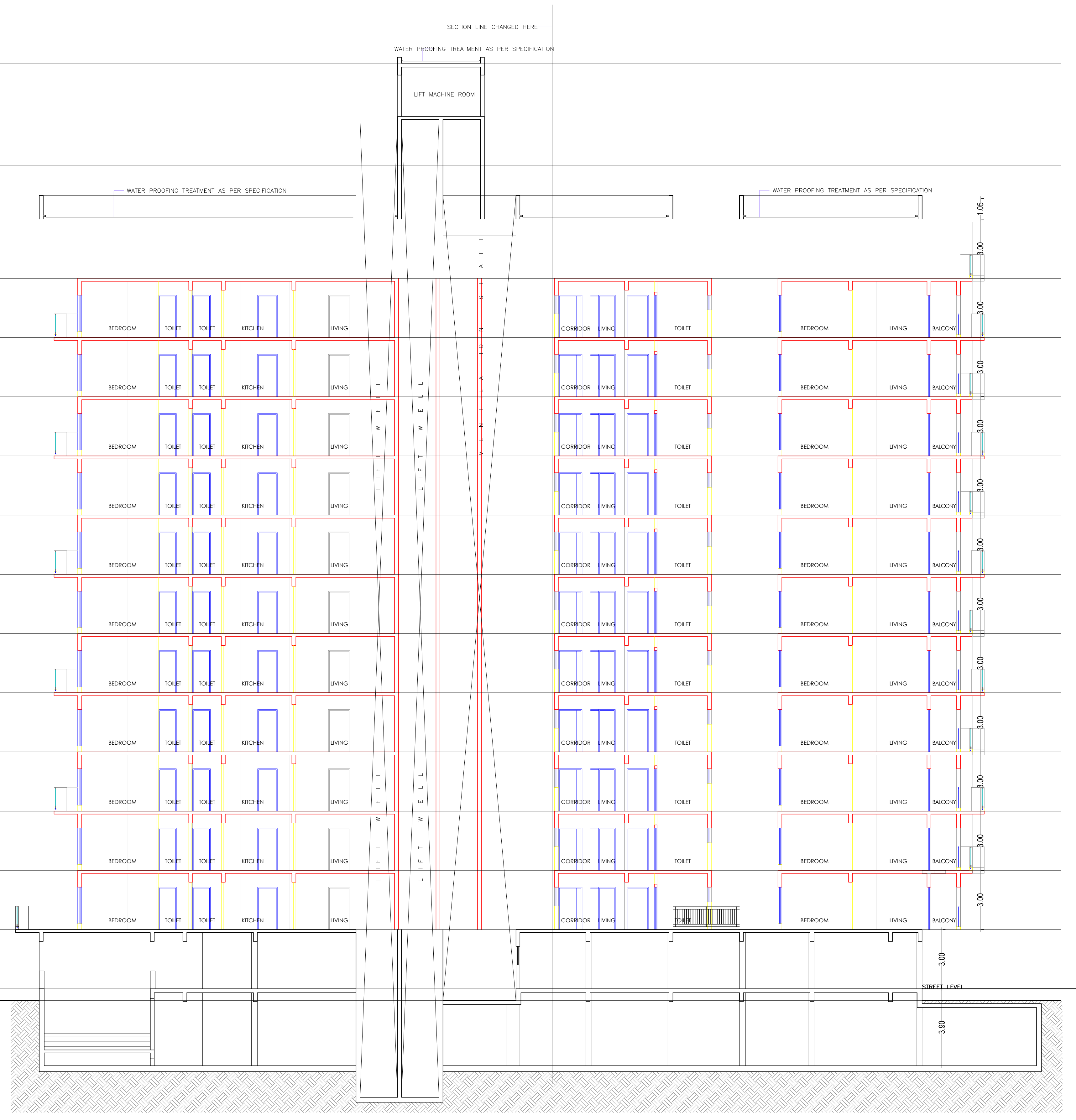
SECTION LINE CHANGED HERE
WATER PROOFING TREATMENT AS PER SPECIFICATION
LIFT MACHINE ROOM
WATER PROOFING TREATMENT AS PER SPECIFICATION
WATER PROOFING TREATMENT AS PER SPECIFICATION
BEDROOM
TOILET
KITCHEN
LIVING
CORRIDOR
BALCONY
STREET LEVEL

SECTION AT Y–Y'

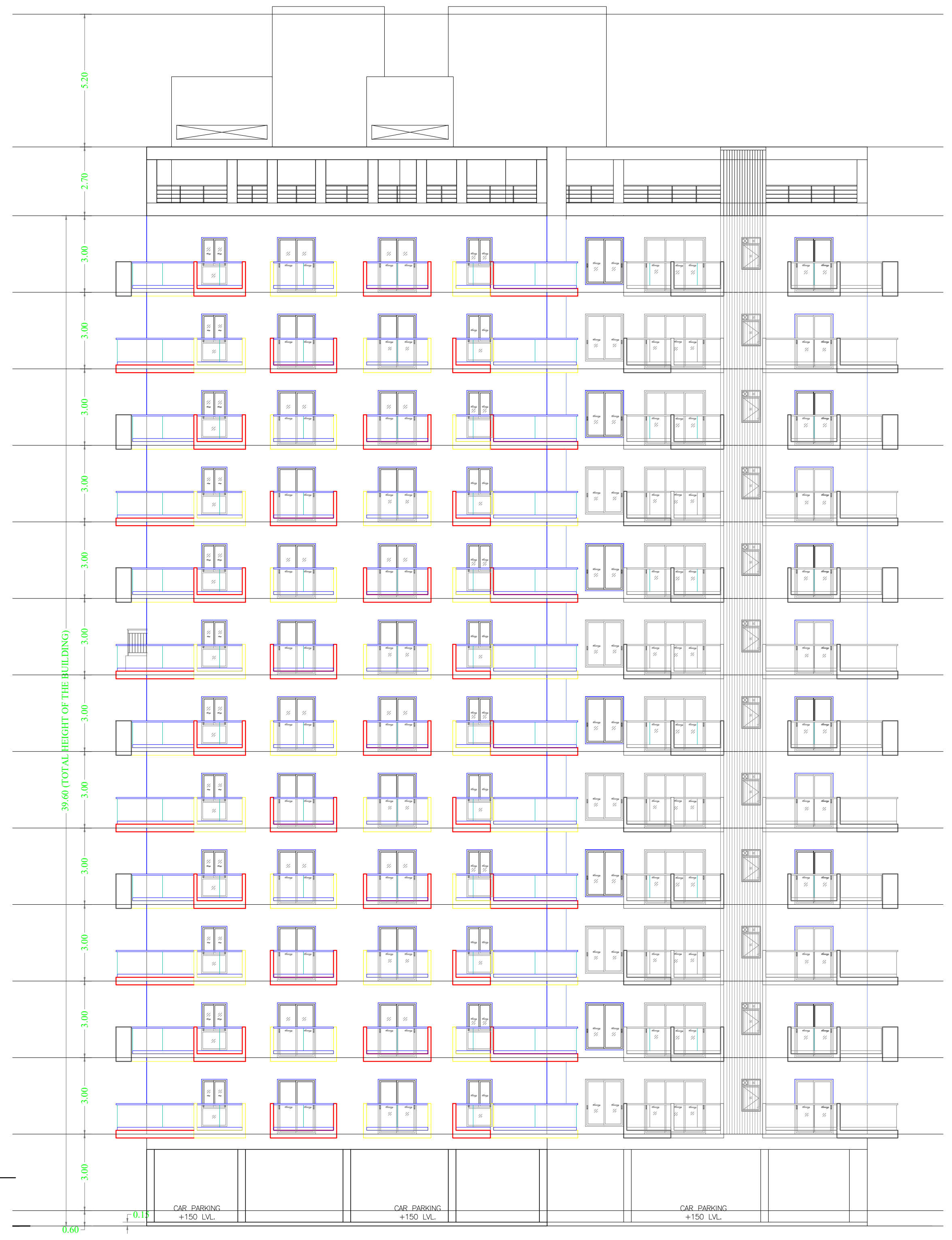
CAR PARKING +150 LVL.

FRONT ELEVATION

AREA STATEMENT JUGSALAI MUNICIPALITY	VERSION NO.: 1.0.70 VERSION DATE: 16/10/2020
PROJECT DETAIL:	
Region: JHARKHAND URBAN LOCAL BODIES	Plot Use: Residential
District: EAST SINGHBHUM	Plot SubUse: Group Housing
Authority: JUGSALAI MUNICIPALITY	PlotNearbyReligiousStructure: NA
Inward_No: JMP/GH/0004/W05/2024	Plot/SubPlot No: 402, 403, 404, 405 , 406, 407, 409, 418 & 55
Application Type: General Proposal	North: -
Project Type: Group Development Scheme	South: -
Nature of Development: New	East: -
Location of Development Area: Old Area	West: Road Width - 9.50 MTR WIDE ROAD Access Road

AREA DETAILS:		SQ.MT.
AREA OF PLOT (Minimum)	(A)	3978.58
NET AREA OF PLOT(Gross Plot Area - Deduction from Gross Plot area)	(A-Deductions)	3978.58
Deduction for Balance Plot Area(from Gross Plot Area)		
Common Plot		450.84
Total		450.84
BALANCE AREA OF PLOT(Net Plot Area - Recreational/Amenity space)	(A-Deductions)	3527.74
PLOT AREA FOR COVERAGE(Net Plot Area)	(A-Deductions)	3978.58
Plot Area for FAR (Net Plot Area + RoadWidening Area)	(A-Deductions)	3978.58
COVERAGE CHECK		
Permissible Coverage area (35.00 %)		1392.50
Proposed Coverage Area (32.81 %)		1305.39
Total Prop. Coverage Area (32.81 %)		1305.39
Balance coverage area (2.19 %)		87.11
FAR CHECK		
Perm. FAR Area (2.500)		9946.45
Maximum Permissible FAR Area (3.00)		11935.74
Total Perm. FAR area		11935.74
Residential FAR		10857.83
Commercial FAR		59.34
Special FAR		927.80
Proposed FAR Area		11883.90
Total Proposed FAR Area		11883.90
Consumed FAR (Factor)		2.99
Balance FAR Area		51.84
Total Paid Proposed FAR Area		1937.45
BUILT UP AREA CHECK		
Total Proposed BuiltUp Area		17819.76
ARCHITECT (Regd)		ANOOP KUMAR
ENGGINEER (Regd)		
SUPERVISOR (Regd)		
OWNER (Regd)		M/S RAMA INFRATECH, PARTNER :- (1) ROSHAN LAL GUPTA (2) NAVIN AGARWAL (3) NIRAJ AGARWAL
DEVELOPMENT AUTHORITY		LOCAL BODY

COLOR INDEX	
PLOT BOUNDARY	■
ABUTTING ROAD	🟩
PROPOSED CONSTRUCTION	🟥
COMMON PLOT	🟨
ROAD WIDENING AREA	🟨
EXISTING (To be retained)	🟦
EXISTING (To be demolished)	🟨

Buildingwise Floor FAR Details

Floor Name	Building Name				Total			
	A (APARTMENT BLOCK)		A (COMMUNITY HALL)					
	Proposed Built Up Area (Sq.mt.)	Proposed FAR Area (Sq.mt.)	Proposed Built Up Area (Sq.mt.)	Proposed FAR Area (Sq.mt.)	Total Proposed Built Up Area (Sq.mt.)	Total FAR Area (Sq.mt.)	Total Maximum Permissible FAR Area (Sq.mt.)	Total Paid Built Up Area (Sq.mt.)
Basement Floor	2459.97	41.08	0.00	0.00	2459.97	41.08	41.08	2459.97
Ground Floor	1249.01	20.24	191.82	59.34	1440.83	79.58	79.58	1440.83
First Floor	1066.30	906.02	184.48	122.88	1250.78	1028.90	1028.90	1250.78
Second Floor	1066.44	903.23	225.78	198.05	1292.22	1101.28	787.86	924.46
Third Floor	1065.82	905.14	317.02	292.06	1382.84	1197.20	0.00	0.00
Fourth Floor	1066.44	903.23	317.02	292.41	1383.46	1195.64	0.00	0.00
Fifth Floor	1065.82	905.14	0.00	0.00	1065.82	905.14	0.00	0.00
Sixth Floor	1066.44	903.23	0.00	0.00	1066.44	903.23	0.00	0.00
Seventh Floor	1070.56	907.54	0.00	0.00	1070.56	907.54	0.00	0.00
Eighth Floor	1066.44	903.23	0.00	0.00	1066.44	903.23	0.00	0.00
Ninth Floor	1065.82	905.14	0.00	0.00	1065.82	905.14	0.00	0.00
Tenth Floor	1066.44	903.23	0.00	0.00	1066.44	903.23	0.00	0.00
Eleventh Floor	1065.82	905.14	0.00	0.00	1065.82	905.14	0.00	0.00
Twelfth Floor	1070.56	907.54	0.00	0.00	1070.56	907.54	0.00	0.00
Terrace Floor	0.00	0.00	71.76	0.00	71.76	0.00	0.00	0.00
Total :	16511.88	10919.13	1307.88	964.74	17819.76	11883.87	1937.42	6076.04

Required Parking(Table 7a)

Building Name	Type	SubUse	Area (Sq.mt.)	Units		Car			Visitors Car			TwoWheeler		
				Reqd.	Prop.	Reqd./Unit	Reqd.	Prop.	Reqd./Unit	Reqd.	Prop.	Reqd./Unit	Reqd.	Prop.
A (APARTMENT BLOCK)	Hazardous	Sewage Treatment Plant	> 0	400	22.39	1	1	-	-	-	-	-	-	-
			> 0	400	22.39	-	-	-	-	-	-	1	1	-
	Residential	Group Housing	0 - 140	1	60.00	1	60	-	-	-	-	-	-	-
			> 140.0	1	24.00	1	36	-	-	-	-	-	-	-
			0.0 - 30	1	-	1	-	-	-	-	-	-	-	-
			0.0 - 30	1	-	-	-	-	-	-	-	1	-	-
			30.01 - 60	1	-	1	-	-	-	-	-	-	-	-
			30.01 - 60	1	-	-	-	-	-	-	-	1	-	-
			0 - 140	1	60.00	-	-	-	1	6	-	-	-	-
			> 140.0	1	24.00	-	-	-	1	2	-	-	-	-
			0.0 - 30	1	-	-	-	-	1	-	-	-	-	-
			30.01 - 60	1	-	-	-	-	1	-	-	-	-	-
A (COMMUNITY HALL)	Commercial	Retail Shop	> 0	50	59.34	1	1	-	-	-	-	-	-	-
			> 0	50	59.34	-	-	-	-	-	-	1	3	-
	Assembly	Community Hall	> 0	25	20.00	1	1	-	-	-	-	-	-	-
			> 0	25	20.00	-	-	-	-	-	-	1	2	-
		Gymnasia	> 0	25	10.00	1	1	-	-	-	-	-	-	-
			> 0	25	10.00	-	-	-	-	-	-	1	1	-
	Public Utility	Health Club	> 0	300	292.41	1	1	-	-	-	-	-	-	-
			> 0	300	292.41	-	-	-	-	-	-	1	3	-
	Total :		-	-	-	-	101	108	-	8	9	-	10	115

Parking Check (Table 7b)

Vehicle Type	Reqd.		Prop.	
	No.	Area	No.	Area
Car	-	-	86	1075.00
Two Stack.Car	-	-	2	25.00
Total Car	101	1262.50	108	1370.00
Parallel Car	-	-	20	270.00
Visitor's Car Parking	-	-	9	112.50
Total Visitor Parking	8	100.00	11	139.50
Parallel Visitor's Car Parking	-	-	2	27.00
TwoWheeler	-	-	115	230.00
Total TwoWheeler	10	20.00	115	230.00
ERiksha Stand Area	-	-	20	270.00
Other Parking	-	-	-	2134.88
Total	1382.50		4374.38	

Building USE/SUBUSE Details

Building Name	Building Use	Building SubUse	Building Structure
A (APARTMENT BLOCK)	Residential	Group Housing	Multistoried
A (COMMUNITY HALL)	Commercial	Retail Shop	Multistoried

FAR & Tenement Details (Table 4c–1)

Building	No. of Same Bldg	Gross Built Up Area (Sq.mt.)	Deductions From Gross BUA(Area in Sq.mt.)	Total Built Up Area (Sq.mt.)	Deductions (Area in Sq.mt.)					Proposed FAR Area (Sq.mt.)					Add Area In FAR (Sq.mt.)	Total FAR Area (Sq.mt.)	Total Consumed Additional FAR Area (Sq.mt.)	Tnmt (No.)
			Cutout		StairCase	Lift	Accessory Use	Ramp	Parking	Resi.	Commercial	Assembly	Public Utility	Hazardous	Stair			
A (APARTMENT BLOCK)	1	17775.87	1263.99	16511.88	842.22	269.17	1068.54	89.19	3209.62	10857.81	0.00	0.00	0.00	22.39	18.69	10919.13	10919.13	85
A (COMMUNITY HALL)	1	1548.43	240.55	1307.88	134.29	23.43	101.33	0.00	84.09	0.00	59.34	613.00	292.41	0.00	0.00	964.74	964.74	05
Grand Total :	2	19324.30	1504.54	17819.76	976.51	292.60	1169.87	89.19	3293.71	10857.81	59.34	613.00	292.41	22.39	18.69	11883.87	11883.87	90

LTP NAME AND SIGNATURE	STRUCTURAL ENG'S NAME AND SIGNATURE	BUILDER NAME AND SIGNATURE	DIGITAL SIGNATURE
ANOOP KUMAR JMP/ENG/0001/2020			

Name : MOTAY [illegible]
Designation : Executive Officer
Organization : Personal

This is system generated MAP. No need to Physically Signed.

Project Title :SHIVA RANGLAL HEIGHTS

DATE	17-04-2024
SHEET NO.	2
	-

Proposal Basic Information

Proposal File No.	JMP/GH/0004/W05/2024
Owner Name	M/S RAMA INFRATECH, PARTNER :- (1) ROSHAN LAL GUPTA (2) NAVIN AGARWAL (3) NIRAJ AGARWAL
Khata No	42, 97, & 176
Plot No	402, 403, 404, 405 , 406, 407, 409, 418 & 55
Village Name	Jugsalai
Use	Residential
SubUse	Group Housing

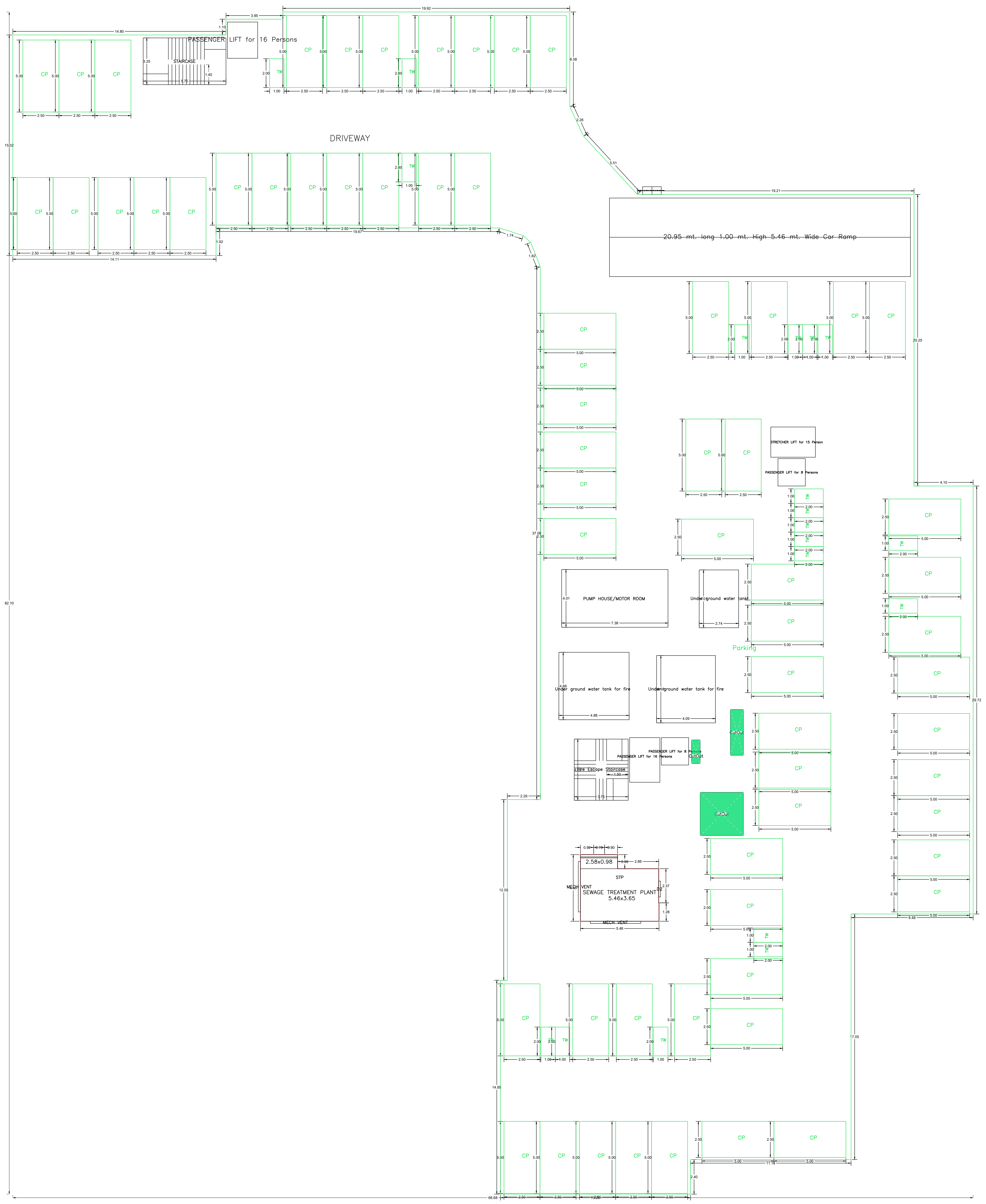

PASSENGER LIFT for 16 Persons
STAIRCASE
DRIVEWAY
20.95 mt. long 1.00 mt. High 5.46 mt. Wide Car Ramp
CP
TW
PUMP HOUSE/MOTOR ROOM
Underground water tank
Under ground water tank for fire
Underground water tank for fire
STRETCHER LIFT for 15 Persons
PASSENGER LIFT for 8 Persons
PASSENGER LIFT for 15 Persons
Parking
STP
SEWAGE TREATMENT PLANT 5.46x3.65
2.58x0.98
MECH VENT

BASEMENT FLOOR PLAN
(Proposed)
(SCALE 1:100)

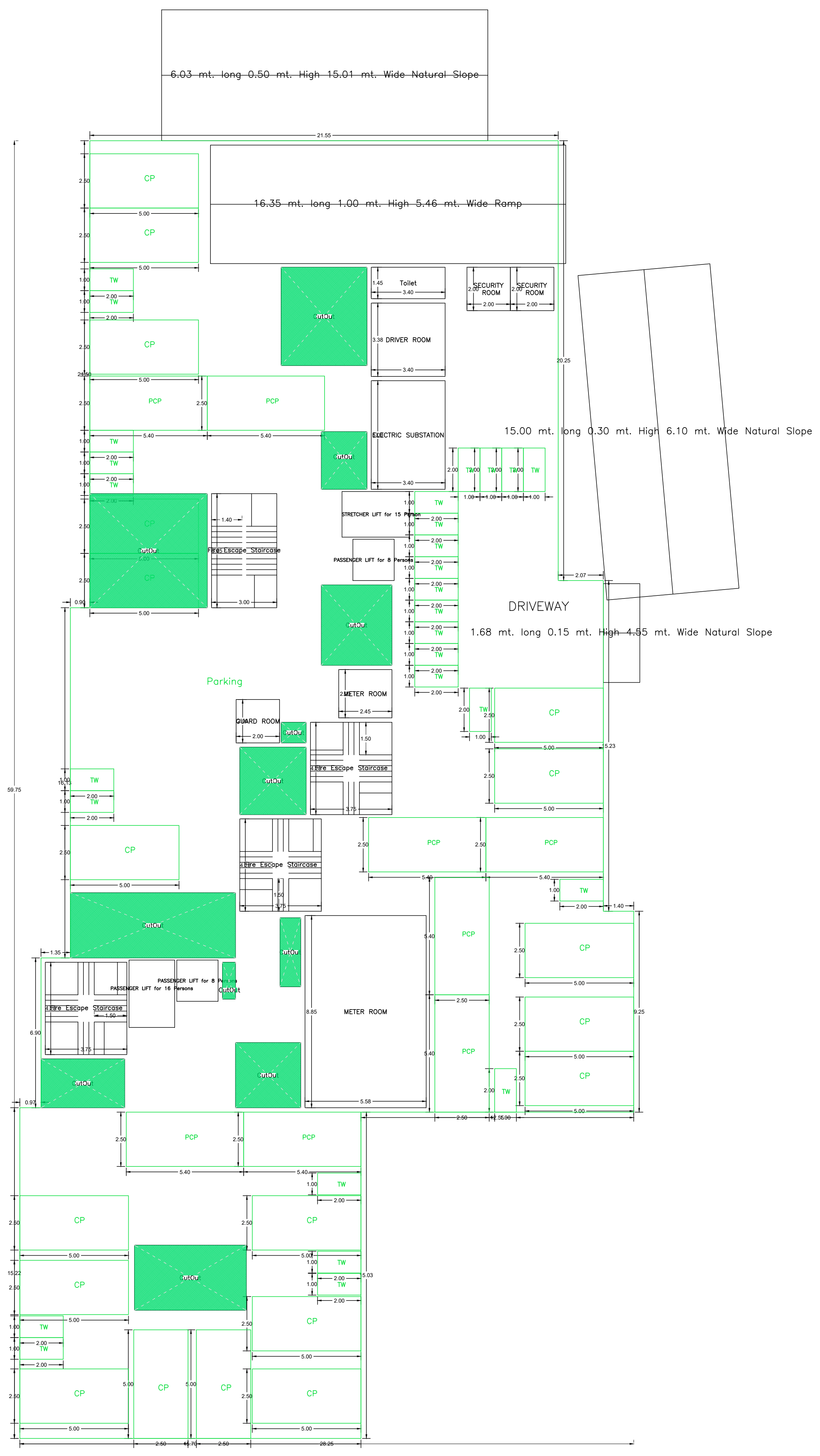

6.03 mt. long 0.50 mt. High 15.01 mt. Wide Natural Slope
16.35 mt. long 1.00 mt. High 5.46 mt. Wide Ramp
15.00 mt. long 0.30 mt. High 6.10 mt. Wide Natural Slope
1.68 mt. long 0.15 mt. High 4.65 mt. Wide Natural Slope
DRIVEWAY
Parking
Toilet
SECURITY ROOM
DRIVER ROOM
ELECTRIC SUBSTATION
STRETCHER LIFT for 15 Persons
PASSENGER LIFT for 8 Persons
PASSENGER LIFT for 15 Persons
GUARD ROOM
METER ROOM
CP
PCP
TW

GROUND FLOOR PLAN
(SCALE 1:100)

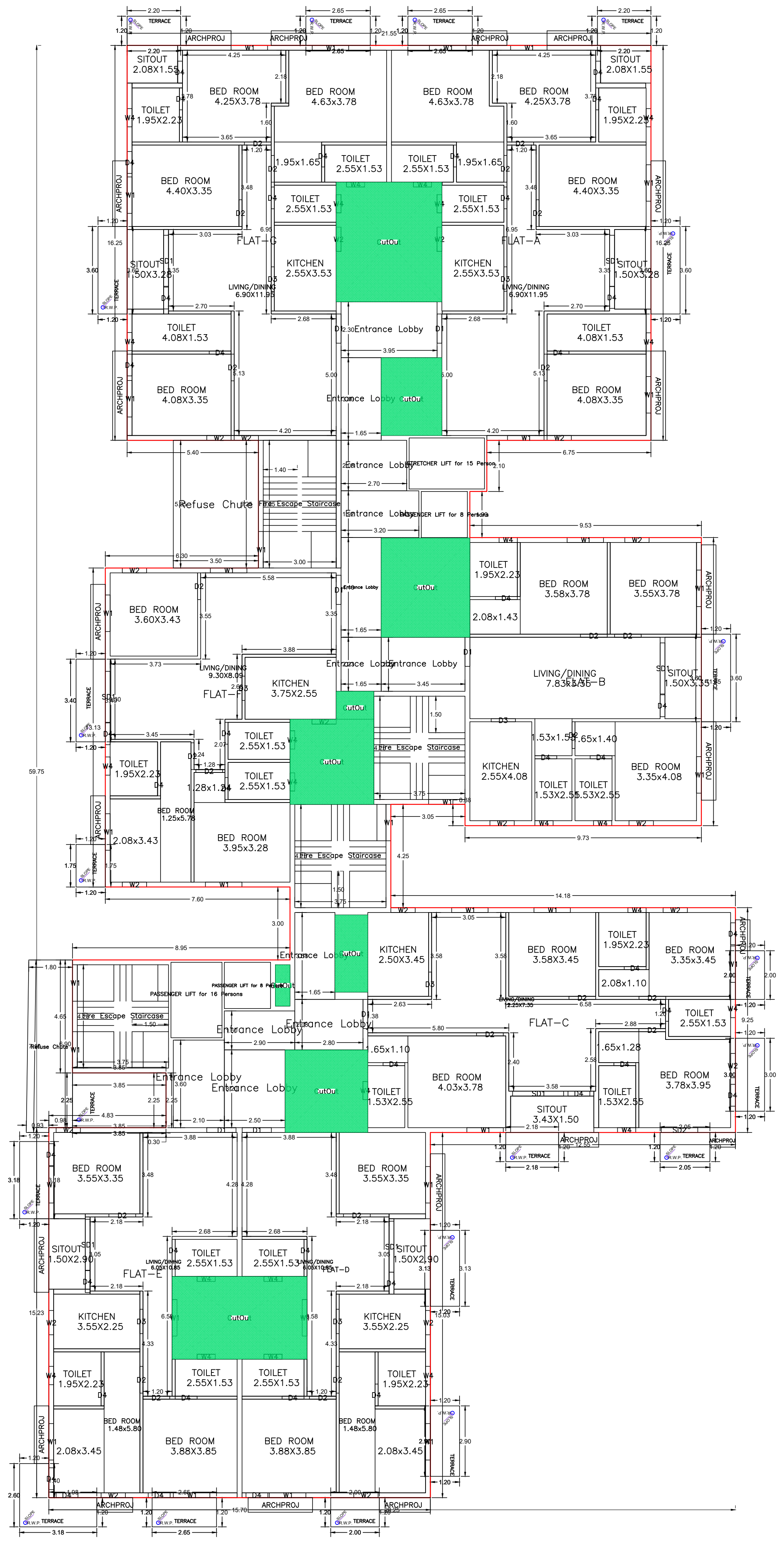

FLAT-A
FLAT-B
FLAT-C
FLAT-D
FLAT-E
FLAT-F
BED ROOM
TOILET
KITCHEN
LIVING/DINING
SITOUT
ARCHPROJ
TERRACE
Entrance Lobby
Refuse Chute
PASSENGER LIFT for 15 Persons
STRETCHER LIFT for 15 Persons
PASSENGER LIFT for 8 Persons

FIRST FLOOR PLAN
(Proposed)
(SCALE 1:100)

ISO_full_bleed_2A0_(1189.00_x_1682.00_MM)

LTP NAME AND SIGNATURE	STRUCTURAL ENG'S NAME AND SIGNATURE	BUILDER NAME AND SIGNATURE	DIGITAL SIGNATURE
ANOOP KUMAR JMP/ENG/0001/2020			

Name : MOTAY [illegible]ANRA
Designation : Executive Officer
Organization : Personal

This is system generated MAP. No need to Physically Signed.

Project Title :SHIVA RANGLAL HEIGHTS

DATE	17-04-2024
SHEET NO.	3
	-

Proposal Basic Information

Proposal File No.	JMP/GH/0004/W05/2024
Owner Name	M/S RAMA INFRATECH, PARTNER :- (1) ROSHAN LAL GUPTA (2) NAVIN AGARWAL (3) NIRAJ AGARWAL
Khata No	42, 97, & 176
Plot No	402, 403, 404, 405 , 406, 407, 409, 418 & 55
Village Name	Jugsalai
Use	Residential
SubUse	Group Housing

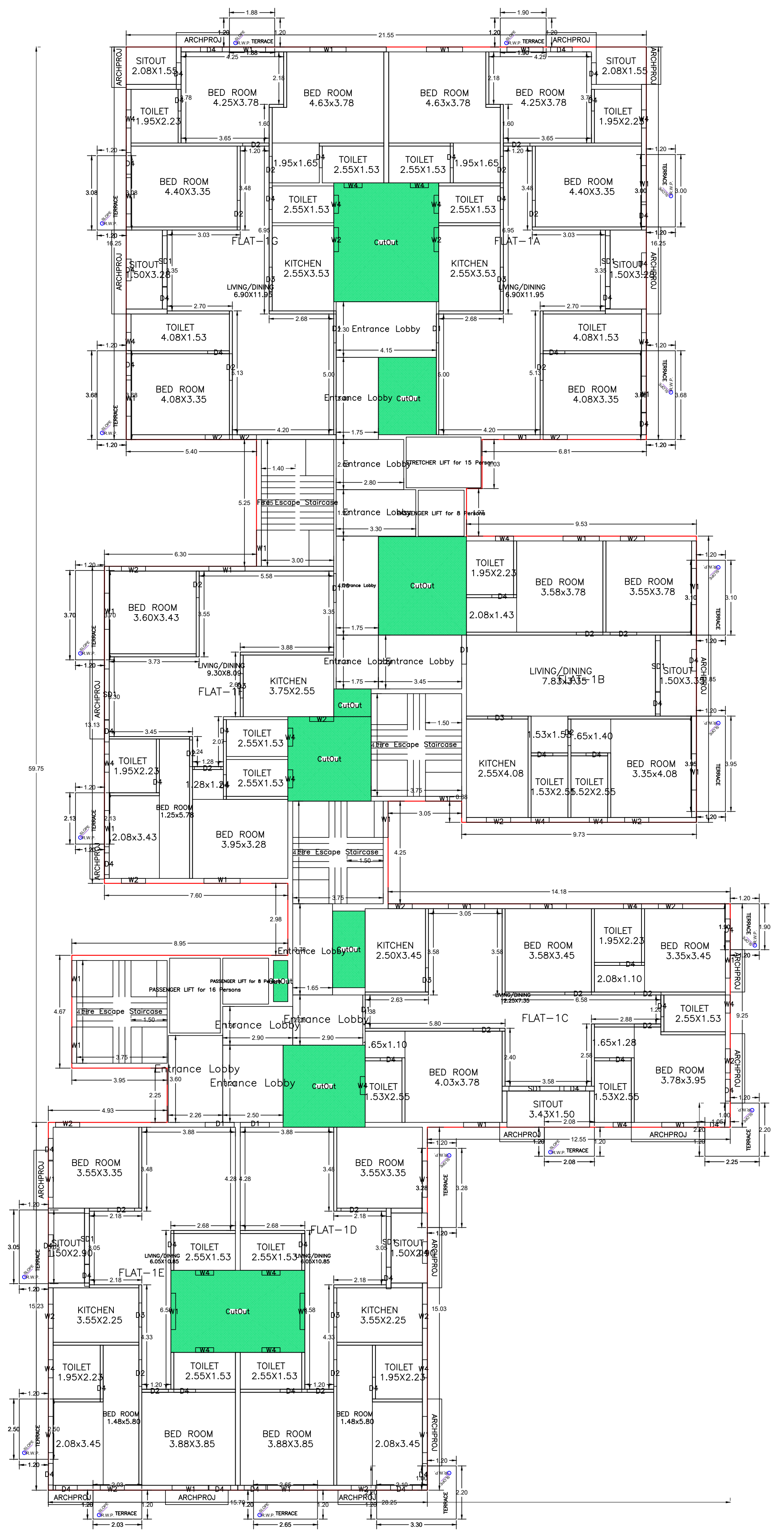
FLAT-1A
FLAT-1B
FLAT-1C
FLAT-1D
FLAT-1E
FLAT-1F
FLAT-1G
BED ROOM
TOILET
KITCHEN
SITOUT
LIVING/DINING
Entrance Lobby
PASSENGER LIFT for 15 Persons
STRETCHER LIFT for 15 Persons
ARCHPROJ
TERRACE

TYPICAL - 2, 4, 6, 8 & 10 FLOOR PLAN
(Proposed)
(SCALE 1:100)

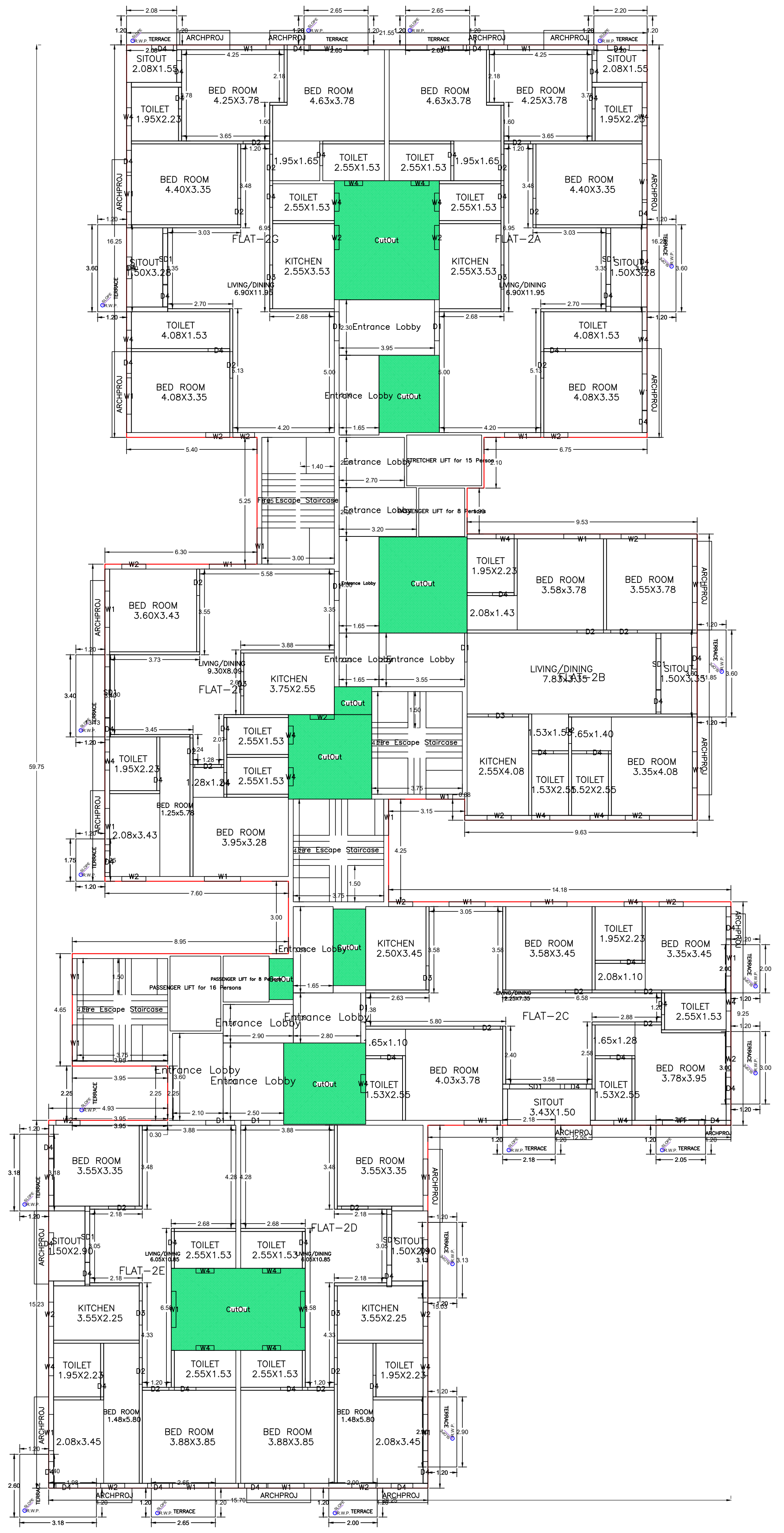
FLAT-2A
FLAT-2B
FLAT-2C
FLAT-2D
FLAT-2E
FLAT-2F
FLAT-2G
BED ROOM
TOILET
KITCHEN
SITOUT
LIVING/DINING
Entrance Lobby
ARCHPROJ
TERRACE

TYPICAL - 3, 5, 9 & 11 FLOOR PLAN
(Proposed)
(SCALE 1:100)

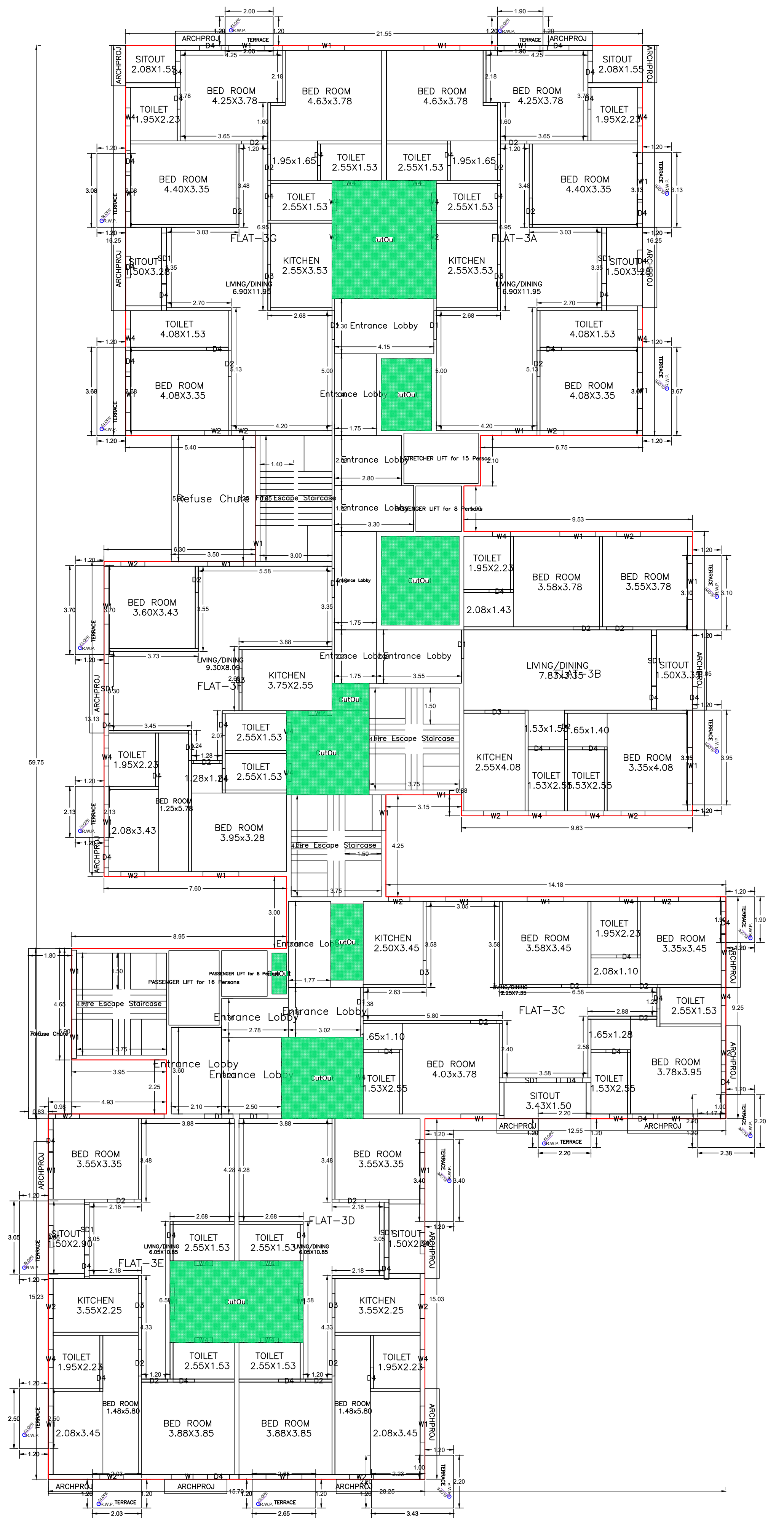
FLAT-3A
FLAT-3B
FLAT-3C
FLAT-3D
FLAT-3E
FLAT-3F
FLAT-3G
BED ROOM
TOILET
KITCHEN
SITOUT
LIVING/DINING
Entrance Lobby
Refuse Chute
ARCHPROJ
TERRACE

TYPICAL - 7 & 12 FLOOR PLAN
(Proposed)
(SCALE 1:100)

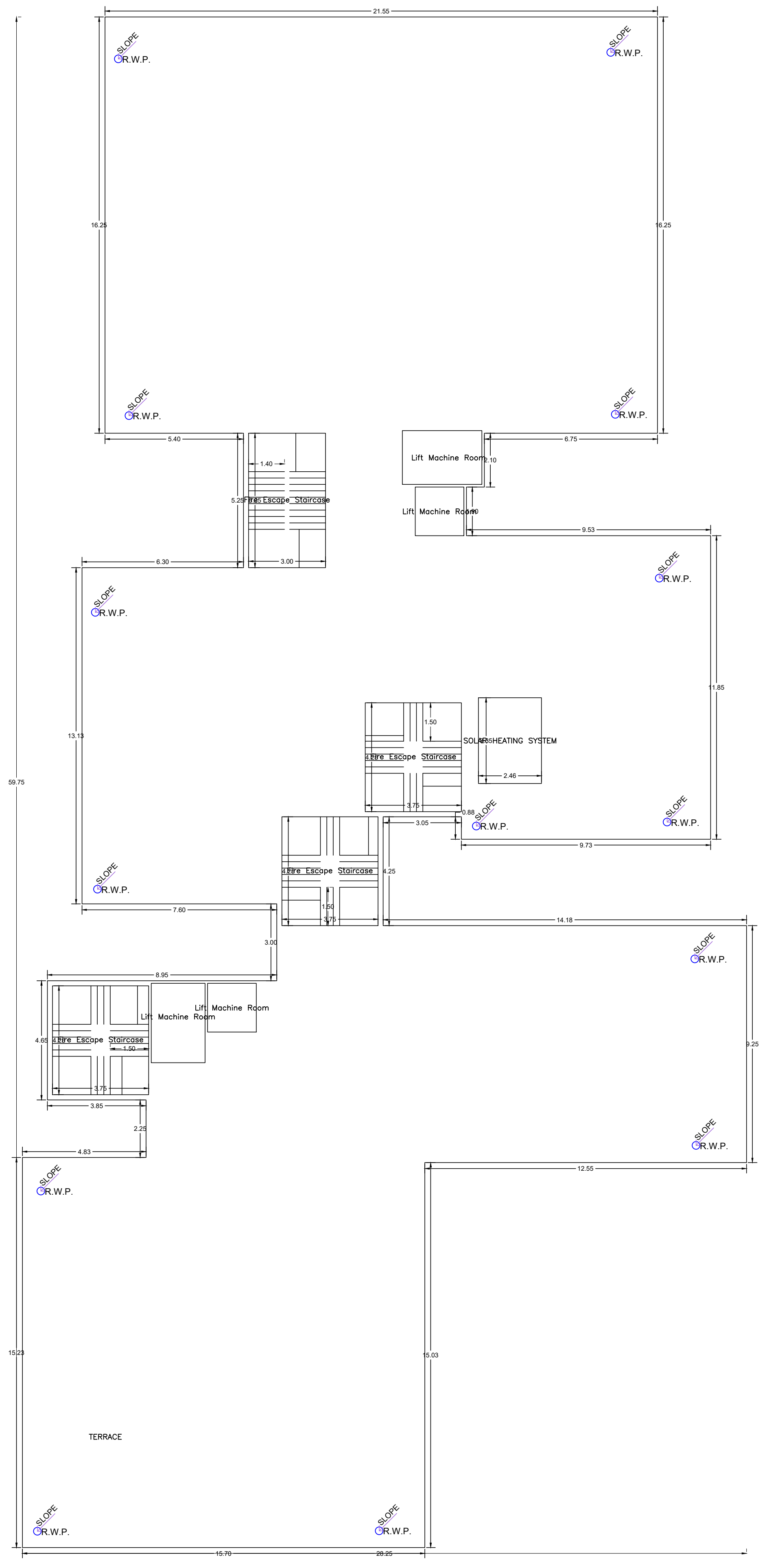
SLOPE
R.W.P.
Lift Machine Room
SOLAR HEATING SYSTEM
TERRACE

TERRACE FLOOR PLAN
(SCALE 1:100)

Building :A (APARTMENT BLOCK)

Floor Name	Gross Builtup Area	Deductions From Gross BUA(Area in Sq.mt.)	Total Built Up Area (Sq.mt.)	Deductions (Area in Sq.mt.)					Proposed FAR Area (Sq.mt.)		Add Area In FAR (Sq.mt.)	Total FAR Area (Sq.mt.)	Total Consumed Additional FAR Area (Sq.mt.)	Tnmt (No.)
		Cutout		StairCase	Lift	Accessory Use	Ramp	Parking	Resi.	Hazardous	Stair			
Basement Floor	2472.81	12.84	2459.97	15.94	25.53	29.62	0.00	2233.78	0.00	22.39	18.69	41.08	41.08	01
Ground Floor	1383.34	134.33	1249.01	63.56	0.00	100.19	89.19	975.83	0.00	0.00	0.00	20.24	20.24	00
First Floor	1160.23	93.93	1066.30	63.56	20.24	76.48	0.00	0.00	906.02	0.00	0.00	906.02	906.02	07
Second Floor	1160.01	93.57	1066.44	63.56	20.24	79.41	0.00	0.00	903.23	0.00	0.00	903.23	903.23	07
Third Floor	1159.91	94.09	1065.82	63.56	20.43	76.69	0.00	0.00	905.14	0.00	0.00	905.14	905.14	07
Fourth Floor	1160.01	93.57	1066.44	63.56	20.24	79.41	0.00	0.00	903.23	0.00	0.00	903.23	903.23	07
Fifth Floor	1159.91	94.09	1065.82	63.56	20.43	76.69	0.00	0.00	905.14	0.00	0.00	905.14	905.14	07
Sixth Floor	1160.01	93.57	1066.44	63.56	20.24	79.41	0.00	0.00	903.23	0.00	0.00	903.23	903.23	07
Seventh Floor	1159.90	89.34	1070.56	63.56	20.24	79.22	0.00	0.00	907.54	0.00	0.00	907.54	907.54	07
Eighth Floor	1160.01	93.57	1066.44	63.56	20.24	79.41	0.00	0.00	903.23	0.00	0.00	903.23	903.23	07
Ninth Floor	1159.91	94.09	1065.82	63.56	20.43	76.69	0.00	0.00	905.14	0.00	0.00	905.14	905.14	07
Tenth Floor	1160.01	93.57	1066.44	63.56	20.24	79.41	0.00	0.00	903.23	0.00	0.00	903.23	903.23	07
Eleventh Floor	1159.91	94.09	1065.82	63.56	20.43	76.69	0.00	0.00	905.14	0.00	0.00	905.14	905.14	07
Twelfth Floor	1159.90	89.34	1070.56	63.56	20.24	79.22	0.00	0.00	907.54	0.00	0.00	907.54	907.54	07
Terrace Floor	0.00	0.00	0.00	0.00	0.00	0.00	0.00	0.00	0.00	0.00	0.00	0.00	0.00	00
Total :	17775.87	1263.99	16511.88	842.22	269.17	1068.54	89.19	3209.62	10857.81	22.39	18.69	10919.13	10919.13	85
Total Number of Same Buildings :	1													
Total :	17775.87	1263.99	16511.88	842.22	269.17	1068.54	89.19	3209.62	10857.81	22.39	18.69	10919.13	10919.13	85

UnitBUA Table for Building :A (APARTMENT BLOCK)

FLOOR	Name	UnitBUA Type	UnitBUA Area	Carpet Area	No. of Rooms	No. of Tenement
BASEMENT FLOOR PLAN	STP	OTHER	22.39	22.21	1	1
TYPICAL - 7 & 12 FLOOR PLAN	FLAT-3A	FLAT	145.74	138.49	12	14
	FLAT-3B	FLAT	107.44	102.40	9	
	FLAT-3C	FLAT	132.81	124.95	11	
	FLAT-3D	FLAT	103.42	98.07	9	
	FLAT-3E	FLAT	103.42	98.59	9	
	FLAT-3F	FLAT	105.61	100.77	8	
	FLAT-3G	FLAT	145.82	138.06	12	
TYPICAL - 3, 5, 9 & 11 FLOOR PLAN	FLAT-2A	FLAT	145.74	137.74	12	28
	FLAT-2B	FLAT	107.44	101.88	9	
	FLAT-2C	FLAT	132.77	124.92	11	
	FLAT-2D	FLAT	103.42	98.07	9	
	FLAT-2E	FLAT	103.42	98.33	9	
	FLAT-2F	FLAT	105.61	100.77	8	
	FLAT-2G	FLAT	145.78	138.26	12	
TYPICAL - 2, 4, 6, 8 & 10 FLOOR PLAN	FLAT-1A	FLAT	145.76	137.94	12	35
	FLAT-1B	FLAT	107.44	101.88	9	
	FLAT-1C	FLAT	132.77	124.92	11	
	FLAT-1D	FLAT	103.42	98.07	9	
	FLAT-1E	FLAT	103.42	98.63	9	
	FLAT-1F	FLAT	105.61	101.43	8	
	FLAT-1G	FLAT	145.84	138.36	12	
FIRST FLOOR PLAN	FLAT-A	FLAT	145.74	137.74	12	7
	FLAT-B	FLAT	107.45	105.53	9	
	FLAT-C	FLAT	132.77	125.45	11	
	FLAT-D	FLAT	103.42	98.07	9	
	FLAT-E	FLAT	103.42	98.59	9	
	FLAT-F	FLAT	105.61	101.67	8	
	FLAT-G	FLAT	145.74	137.74	12	
Total:	-	-	10153.08	9635.74	841	85

SCHEDULE OF DOOR:

BUILDING NAME	NAME	LENGTH	HEIGHT	NOS
A (APARTMENT BLOCK)	D4	0.90	2.13	638
A (APARTMENT BLOCK)	D3	1.00	2.13	84
A (APARTMENT BLOCK)	D2	1.10	2.13	289
A (APARTMENT BLOCK)	D1	1.20	2.13	84

SCHEDULE OF WINDOW/VENTILATION:

BUILDING NAME	NAME	LENGTH	HEIGHT	NOS
A (APARTMENT BLOCK)	W4	0.75	2.70	288
A (APARTMENT BLOCK)	W2	0.90	2.70	06
A (APARTMENT BLOCK)	W2	1.00	2.70	222
A (APARTMENT BLOCK)	W1	1.50	2.70	397
A (APARTMENT BLOCK)	SD2	1.50	2.70	01
A (APARTMENT BLOCK)	W1	1.60	2.70	06
A (APARTMENT BLOCK)	W1	1.62	2.70	02
A (APARTMENT BLOCK)	W1	1.64	2.70	02
A (APARTMENT BLOCK)	SD1	2.10	2.70	84
A (APARTMENT BLOCK)	MECH VENT	3.50	2.70	02

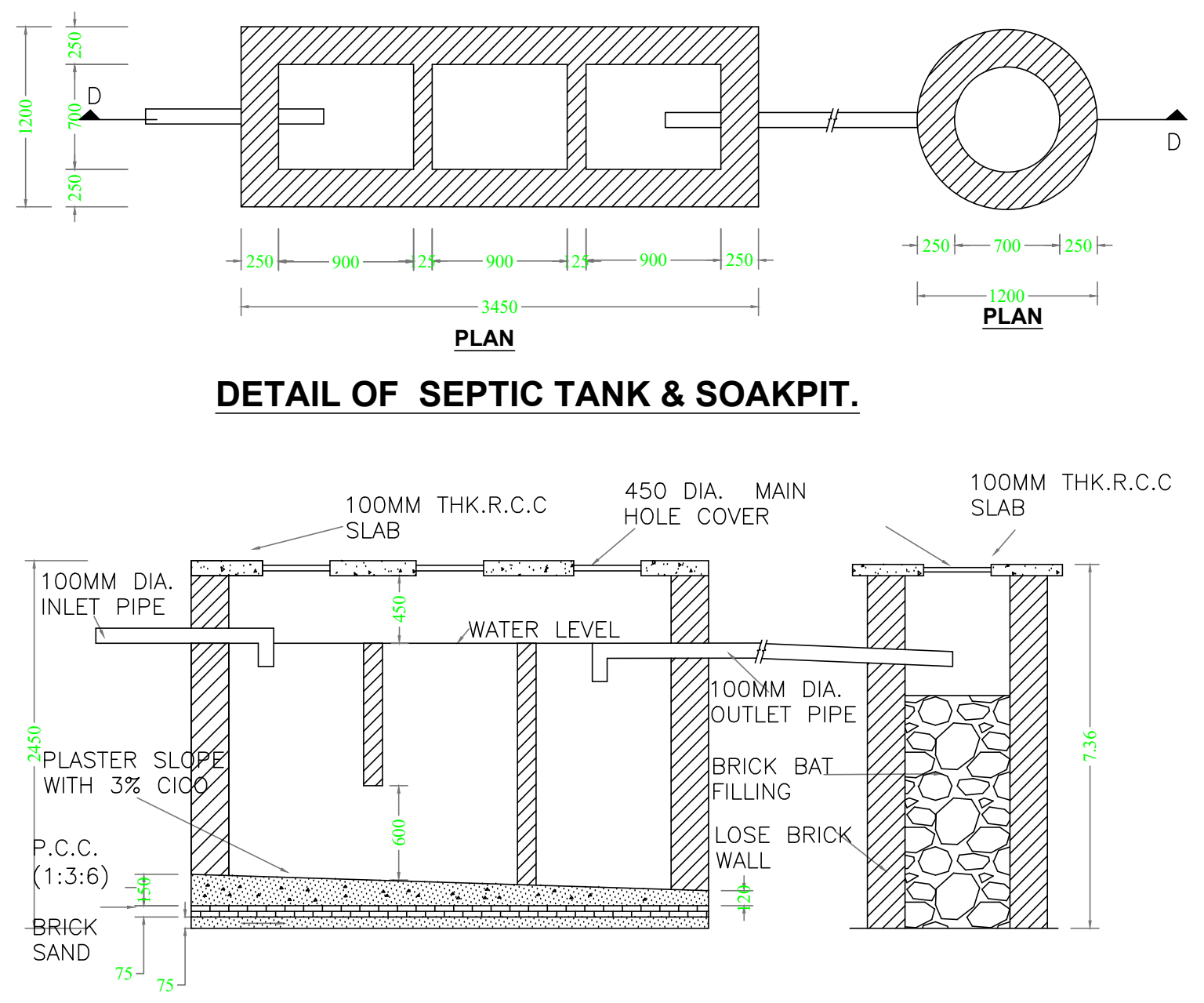
PLAN
PLAN
D
D
250
700
900
125
3450
1200
100MM THK.R.C.C SLAB
450 DIA. MAIN HOLE COVER
100MM THK.R.C.C SLAB
100MM DIA. INLET PIPE
WATER LEVEL
100MM DIA. OUTLET PIPE
PLASTER SLOPE WITH 3% CICO
BRICK BAT FILLING
LOSE BRICK WALL
P.C.C. (1:3:6)
BRICK
SAND
2450
600
450
7.36
150
120
75

DETAIL OF SEPTIC TANK & SOAKPIT.

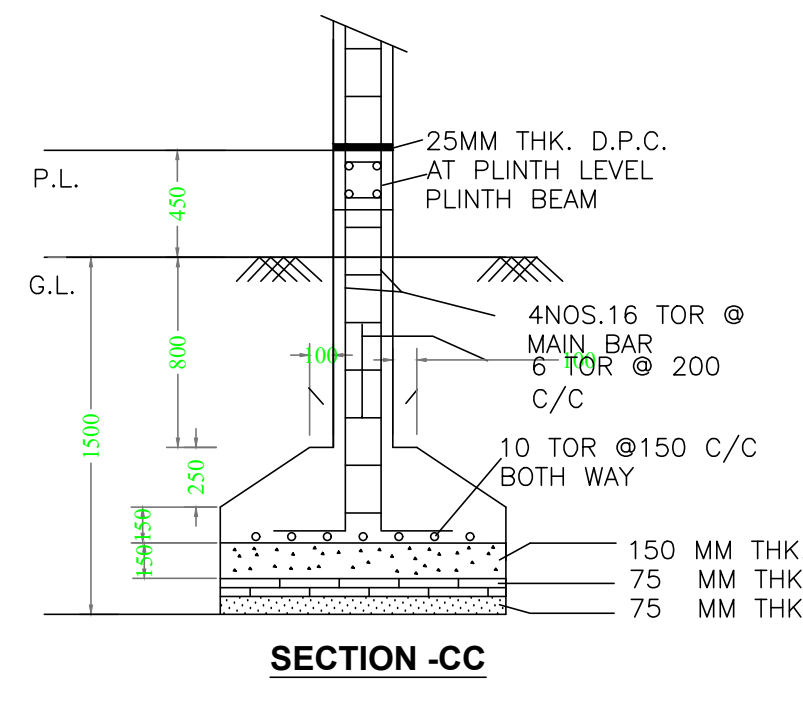
P.L.
G.L.
25MM THK. D.P.C. AT PLINTH LEVEL
PLINTH BEAM
4NOS.16 TOR @ MAIN BAR
6 TOR @ 200 C/C
10 TOR @150 C/C BOTH WAY
150 MM THK. P.C.C. (1:4:8)
75 MM THK. BRICK SOLING.
75 MM THK. SAND FILLING.
450
800
1500
250
150
100

SECTION -CC

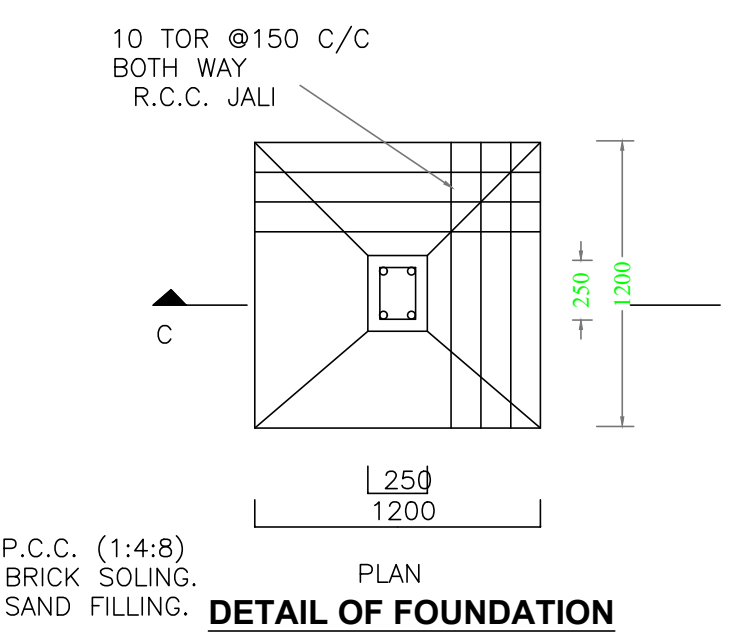
10 TOR @150 C/C BOTH WAY R.C.C. JALI
C
250
1200
1200
PLAN

DETAIL OF FOUNDATION

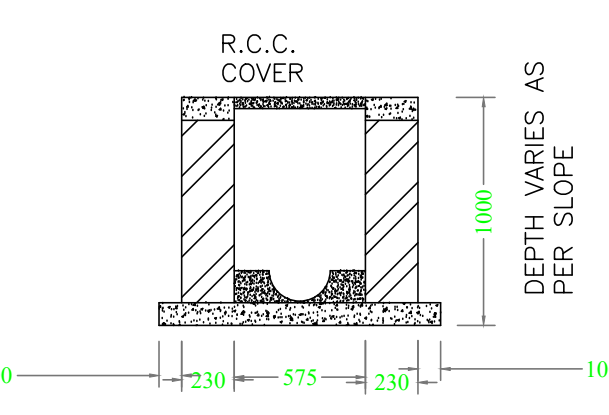
R.C.C. COVER
DEPTH VARIES AS PER SLOPE
1000
100
230
575

SECTION AT 2-2

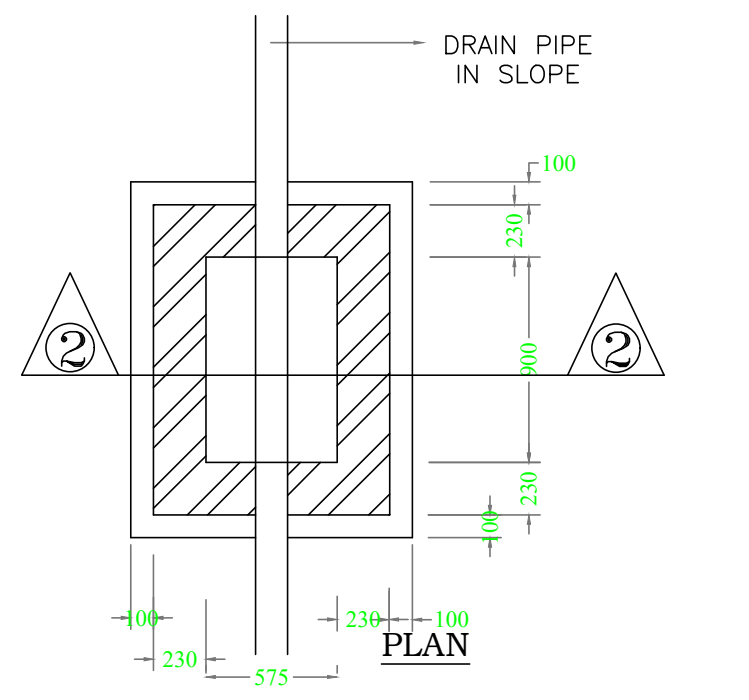
DRAIN PIPE IN SLOPE
2
2
100
230
900
575
PLAN

I.C.DETAILS

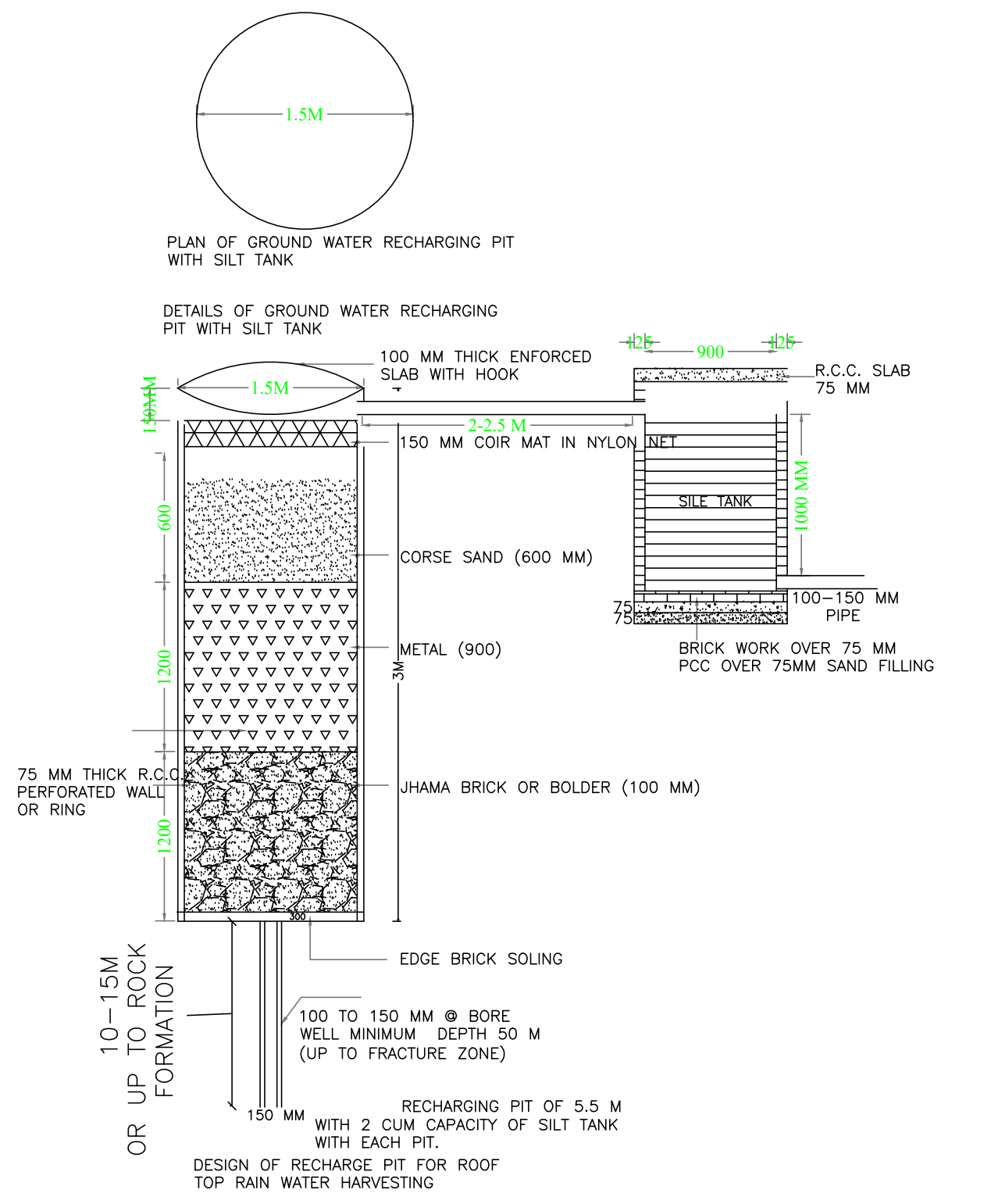
1.5M
PLAN OF GROUND WATER RECHARGING PIT WITH SILT TANK
DETAILS OF GROUND WATER RECHARGING PIT WITH SILT TANK
100 MM THICK ENFORCED SLAB WITH HOOK
R.C.C. SLAB 75 MM
150MM
2-2.5 M
125
900
150 MM COIR MAT IN NYLON NET
SILE TANK
1000 MM
CORSE SAND (600 MM)
100-150 MM PIPE
BRICK WORK OVER 75 MM PCC OVER 75MM SAND FILLING
METAL (900)
3M
75 MM THICK R.C.C. PERFORATED WALL OR RING
JHAMA BRICK OR BOLDER (100 MM)
600
1200
1200
300
EDGE BRICK SOLING
10-15M OR UP TO ROCK FORMATION
100 TO 150 MM @ BORE WELL MINIMUM DEPTH 50 M (UP TO FRACTURE ZONE)
150 MM
RECHARGING PIT OF 5.5 M WITH 2 CUM CAPACITY OF SILT TANK WITH EACH PIT.
DESIGN OF RECHARGE PIT FOR ROOF TOP RAIN WATER HARVESTING

LTP NAME AND SIGNATURE	STRUCTURAL ENG'S NAME AND SIGNATURE	BUILDER NAME AND SIGNATURE	DIGITAL SIGNATURE
ANOOP KUMAR JMP/ENG/0001/2020			

Name : MOTAY ANRA
Designation : Executive Officer
Organization : Personal

This is system generated MAP. No need to Physically Signed.

Project Title :SHIVA RANGLAL HEIGHTS

DATE	17-04-2024
SHEET NO.	4

Proposal Basic Information

-

Proposal File No.	JMP/GH/0004/W05/2024
Owner Name	M/S RAMA INFRATECH, PARTNER :- (1) ROSHAN LAL GUPTA (2) NAVIN AGARWAL (3) NIRAJ AGARWAL
Khata No	42, 97, & 176
Plot No	402, 403, 404, 405 , 406, 407, 409, 418 & 55
Village Name	Jugsalai
Use	Residential
SubUse	Group Housing

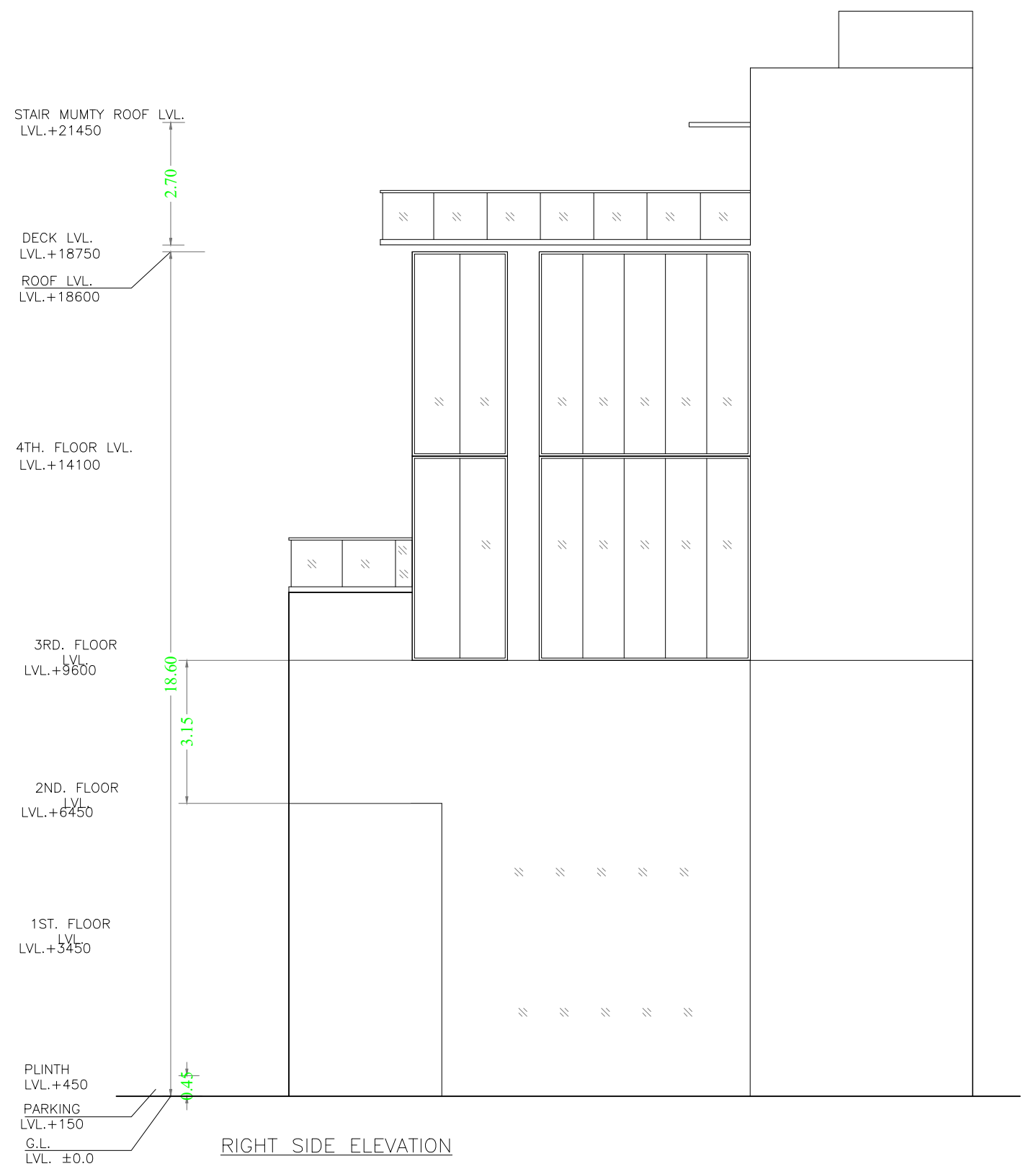
STAIR MUMTY ROOF LVL. LVL.+21450
DECK LVL. LVL.+18750
ROOF LVL. LVL.+18600
4TH. FLOOR LVL. LVL.+14100
3RD. FLOOR LVL.+9600
2ND. FLOOR LVL.+6450
1ST. FLOOR LVL.+5450
PLINTH LVL.+450
PARKING LVL.+150
G.L. LVL. ±0.0

RIGHT SIDE ELEVATION

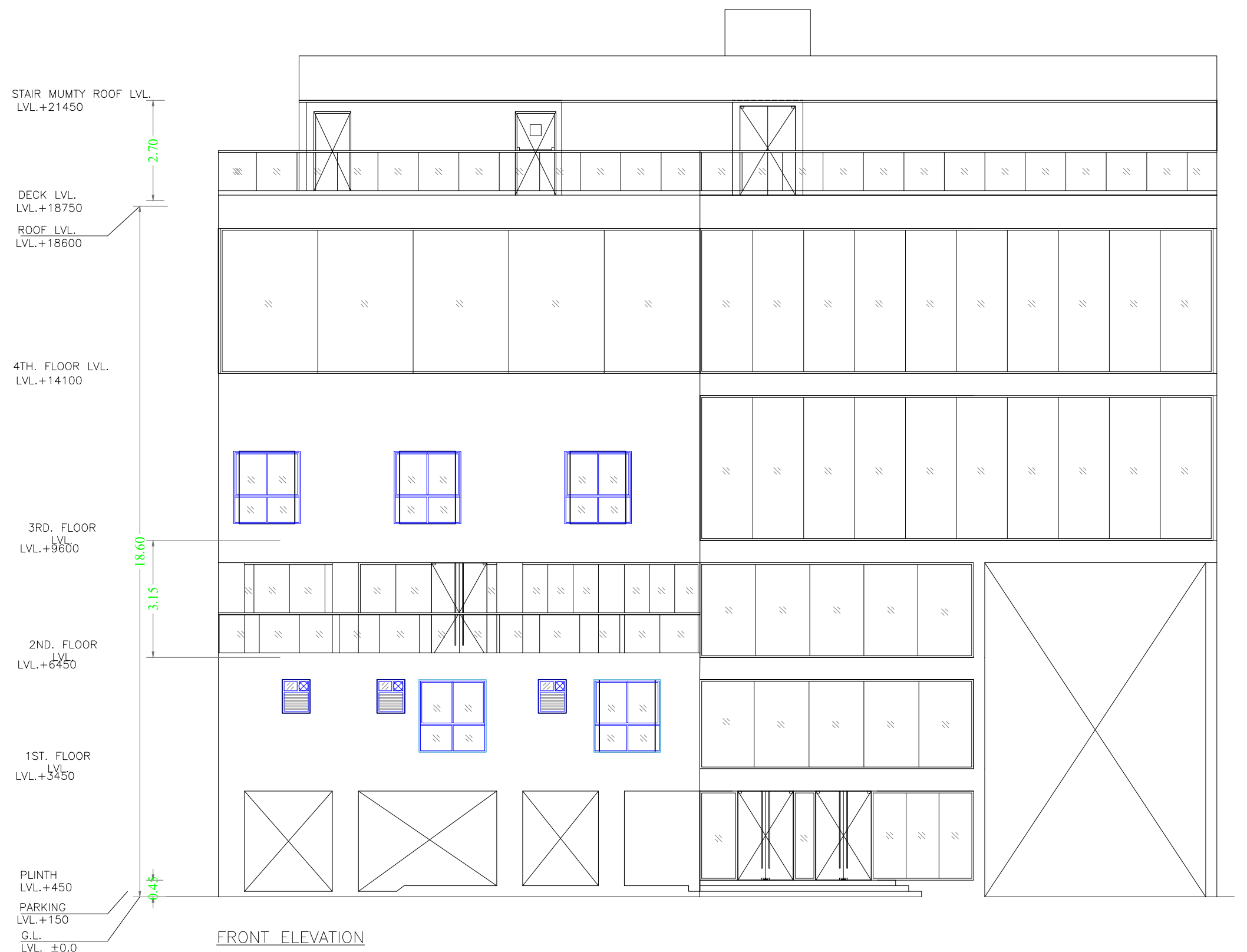
STAIR MUMTY ROOF LVL. LVL.+21450
DECK LVL. LVL.+18750
ROOF LVL. LVL.+18600
4TH. FLOOR LVL. LVL.+14100
3RD. FLOOR LVL.+9600
2ND. FLOOR LVL.+6450
1ST. FLOOR LVL.+5450
PLINTH LVL.+450
PARKING LVL.+150
G.L. LVL. ±0.0

FRONT ELEVATION

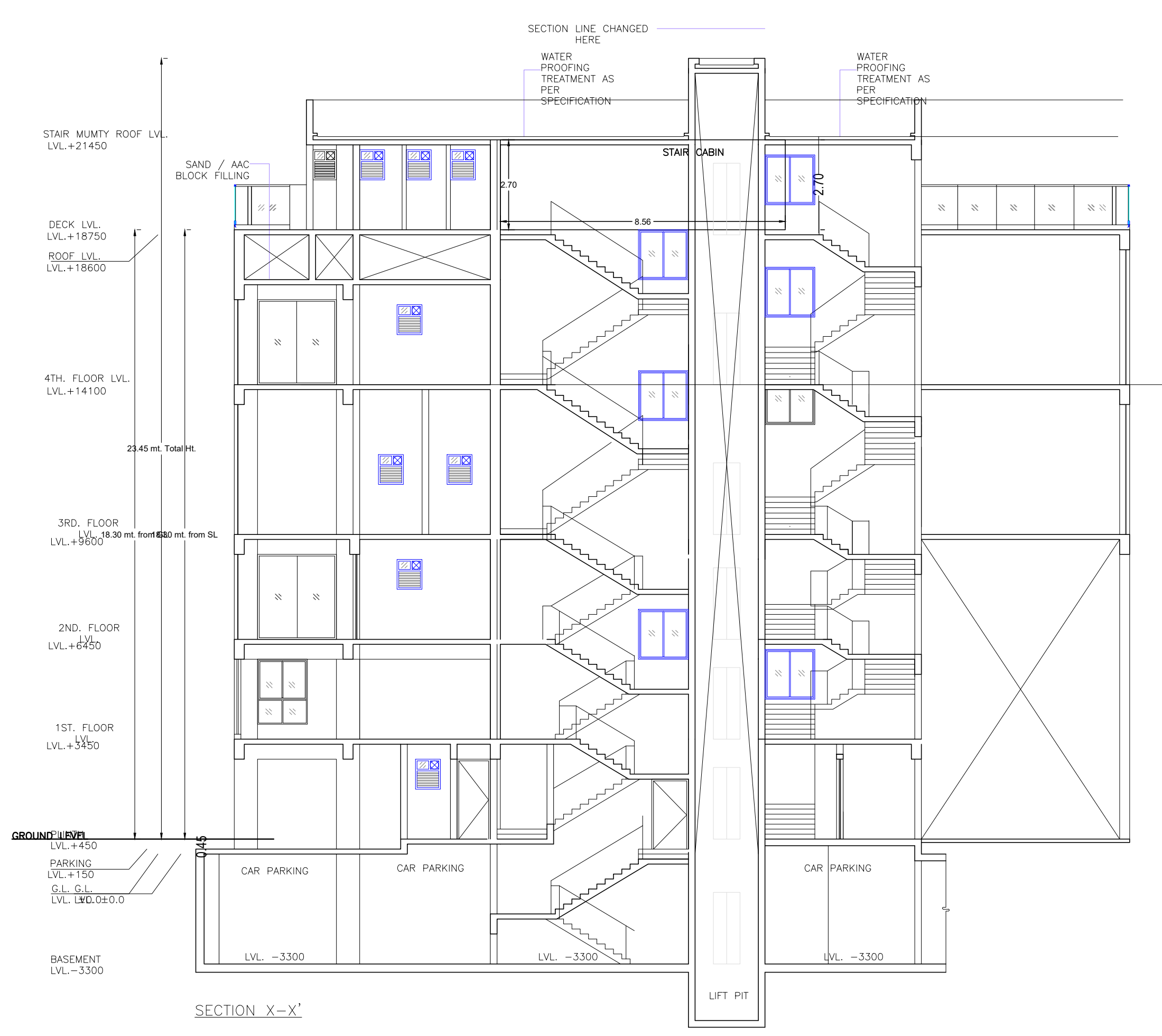
SECTION LINE CHANGED HERE
WATER PROOFING TREATMENT AS PER SPECIFICATION
SAND / AAC BLOCK FILLING
STAIR MUMTY ROOF LVL. LVL.+21450
DECK LVL. LVL.+18750
ROOF LVL. LVL.+18600
4TH. FLOOR LVL. LVL.+14100
3RD. FLOOR LVL.+9600
2ND. FLOOR LVL.+6450
1ST. FLOOR LVL.+5450
GROUND LEVEL
PARKING LVL.+150
CAR PARKING
STAIR CABIN
BASEMENT LVL.-3300
LIFT PIT

SECTION X-X'

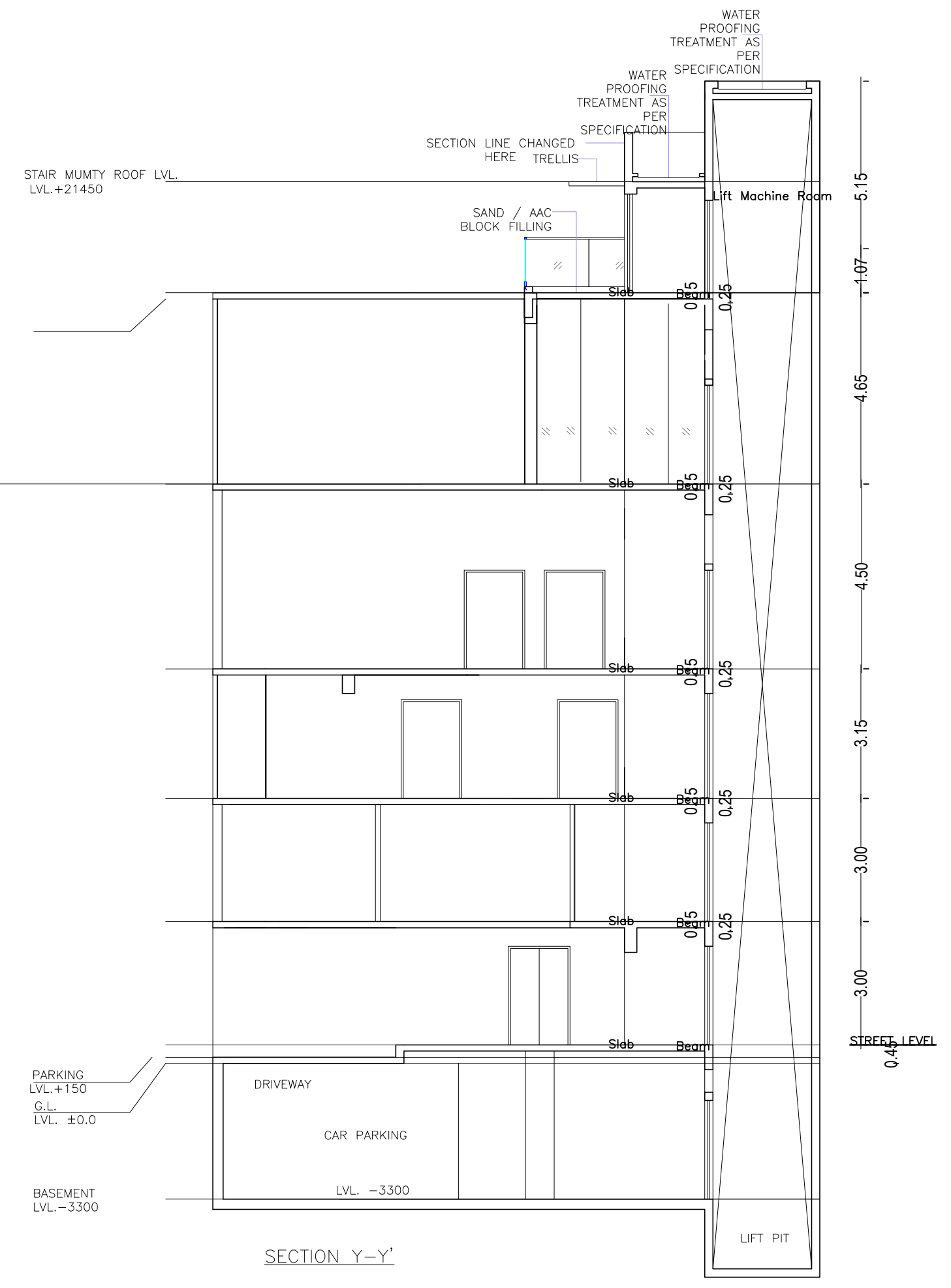
WATER PROOFING TREATMENT AS PER SPECIFICATION
SECTION LINE CHANGED HERE
TRELLIS
SAND / AAC BLOCK FILLING
STAIR MUMTY ROOF LVL. LVL.+21450
Lift Machine Room
Slab
DRIVEWAY
CAR PARKING
STREET LEVEL
PARKING LVL.+150
G.L. LVL. ±0.0
BASEMENT LVL.-3300
LIFT PIT

SECTION Y-Y'

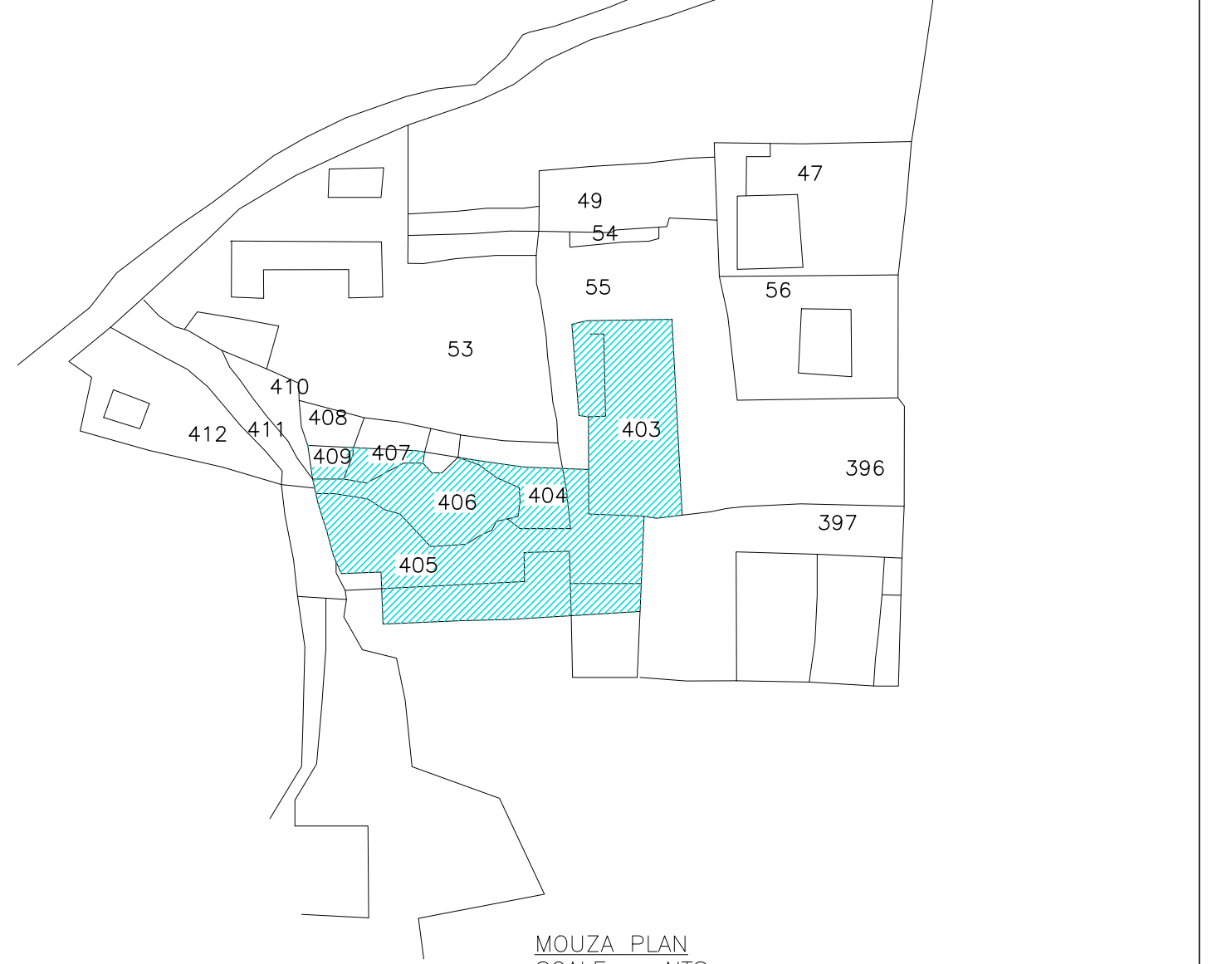
49
47
54
55
56
53
410
408
403
412
411
409
407
406
404
396
405
397

MOUZA PLAN
SCALE :- NTS

(SCALE 1:100)

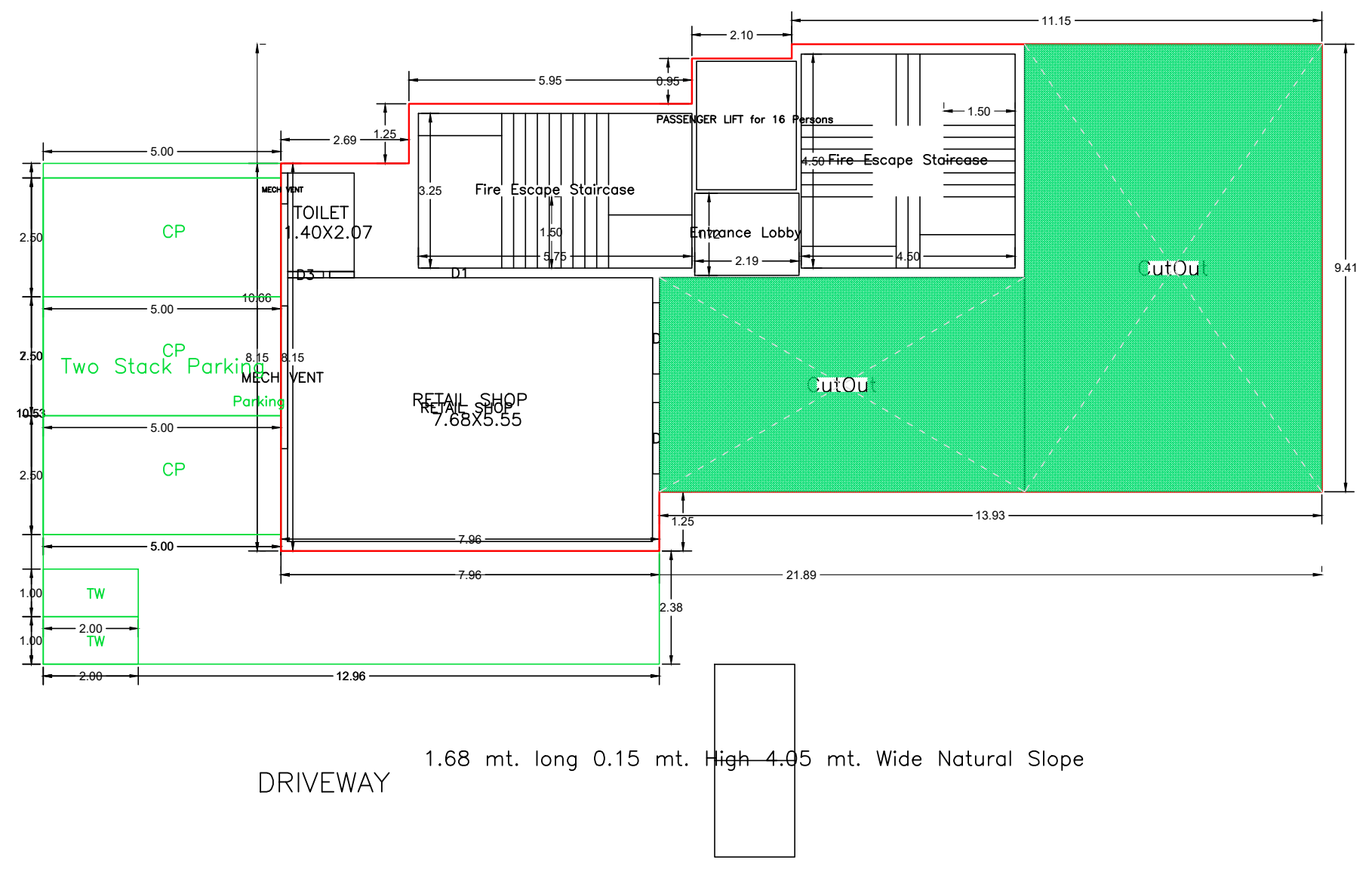
CP
Two Stack Parking
TOILET 1.40X2.07
MECH VENT
RETAIL SHOP 7.68X5.55
Fire Escape Staircase
PASSENGER LIFT for 16 Persons
Entrance Lobby
VOID
DRIVEWAY
1.68 mt. long 0.15 mt. High 4.05 mt. Wide Natural Slope

GROUND FLOOR PLAN
(Proposed)
(SCALE 1:100)

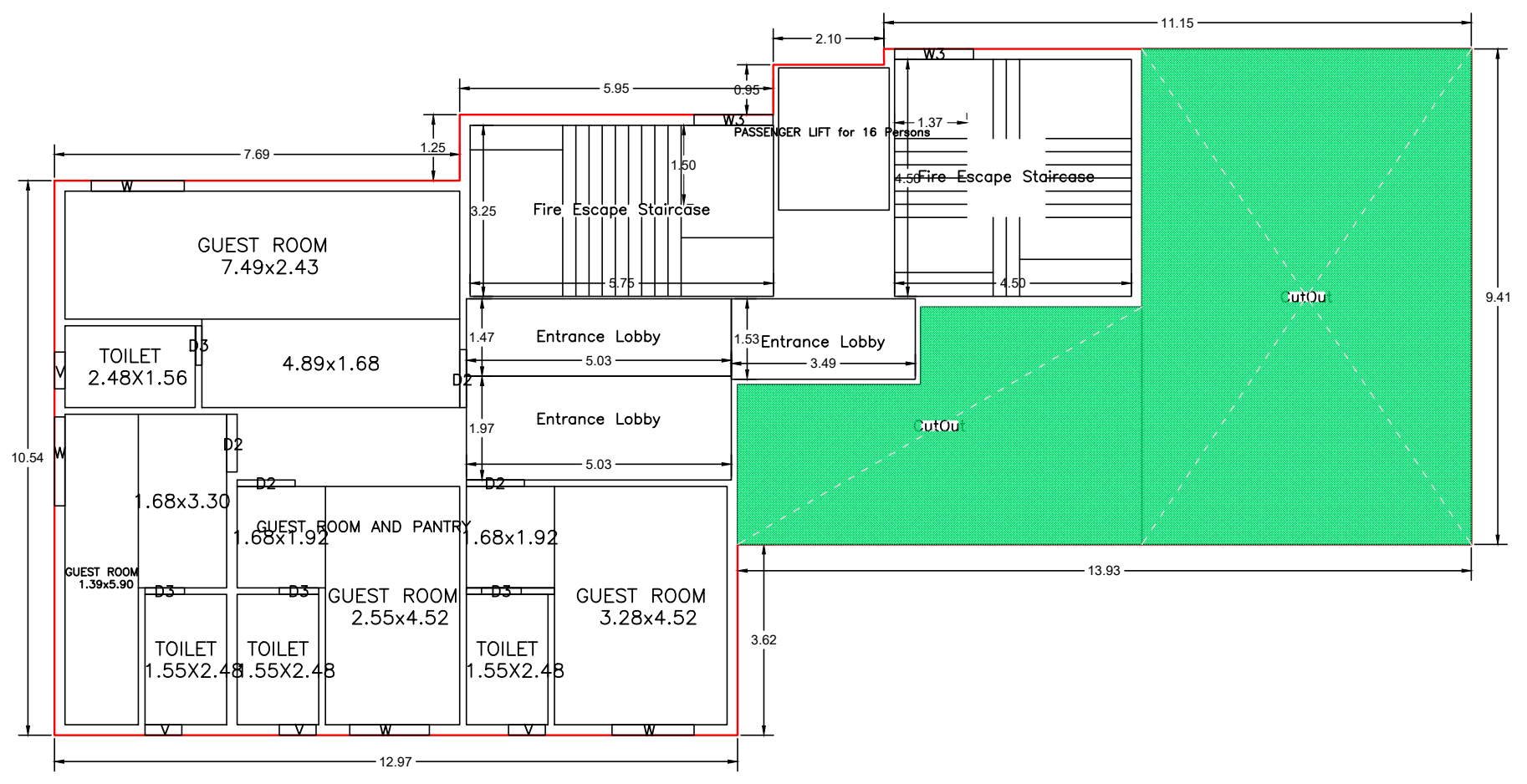
GUEST ROOM 7.49X2.43
TOILET 2.48X1.56
4.89X1.68
Fire Escape Staircase
Entrance Lobby
GUEST ROOM AND PANTRY
GUEST ROOM 2.55X4.52
GUEST ROOM 3.28X4.52
TOILET 1.55X2.48
PASSENGER LIFT for 16 Persons

FIRST FLOOR PLAN
(Proposed)
(SCALE 1:100)

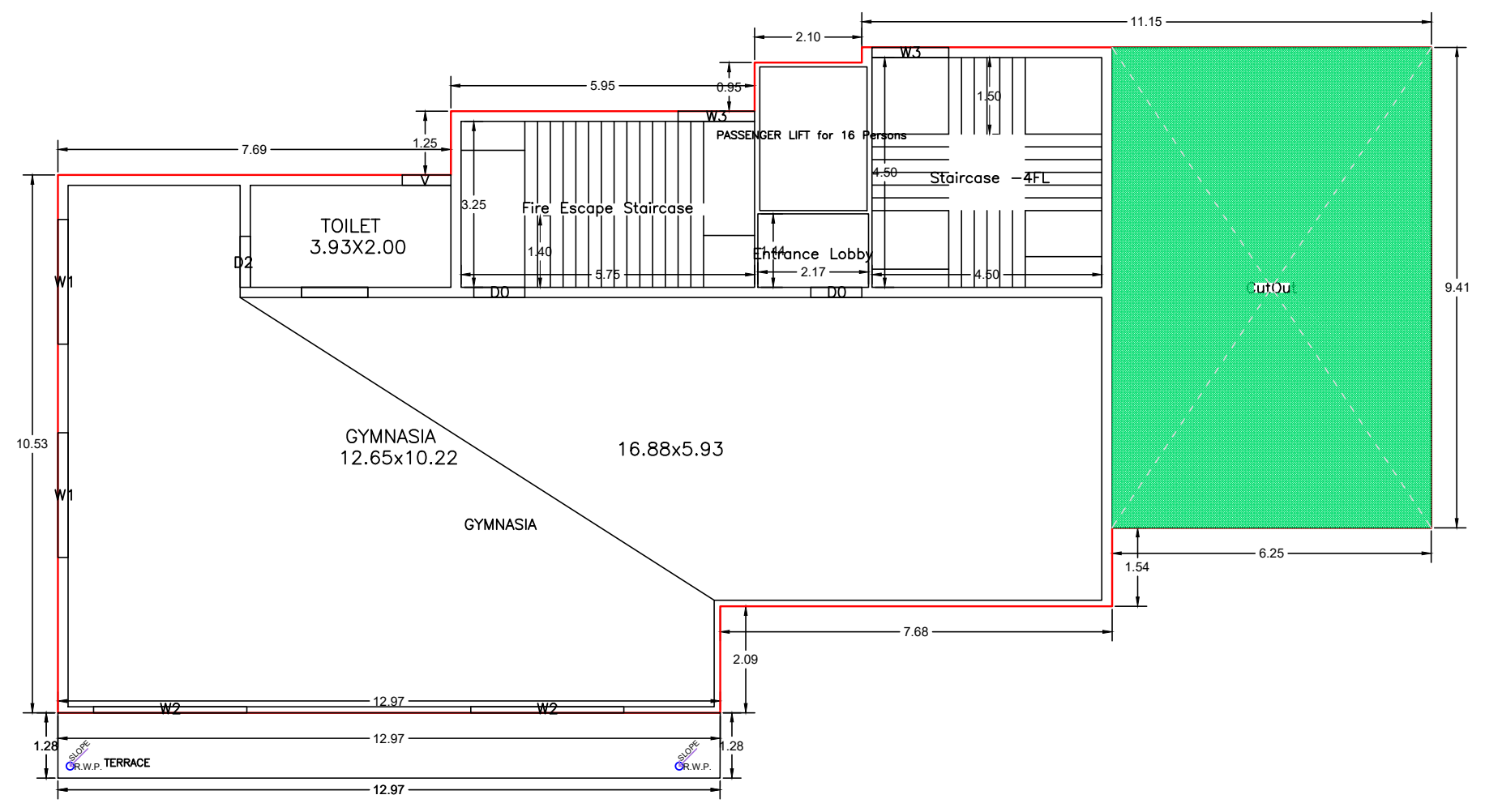
TOILET 3.93X2.00
GYMNASIA 12.65X10.22
16.88X5.93
GYMNASIA
Fire Escape Staircase
Entrance Lobby
PASSENGER LIFT for 16 Persons
TERRACE

SECOND FLOOR PLAN
(Proposed)
(SCALE 1:100)

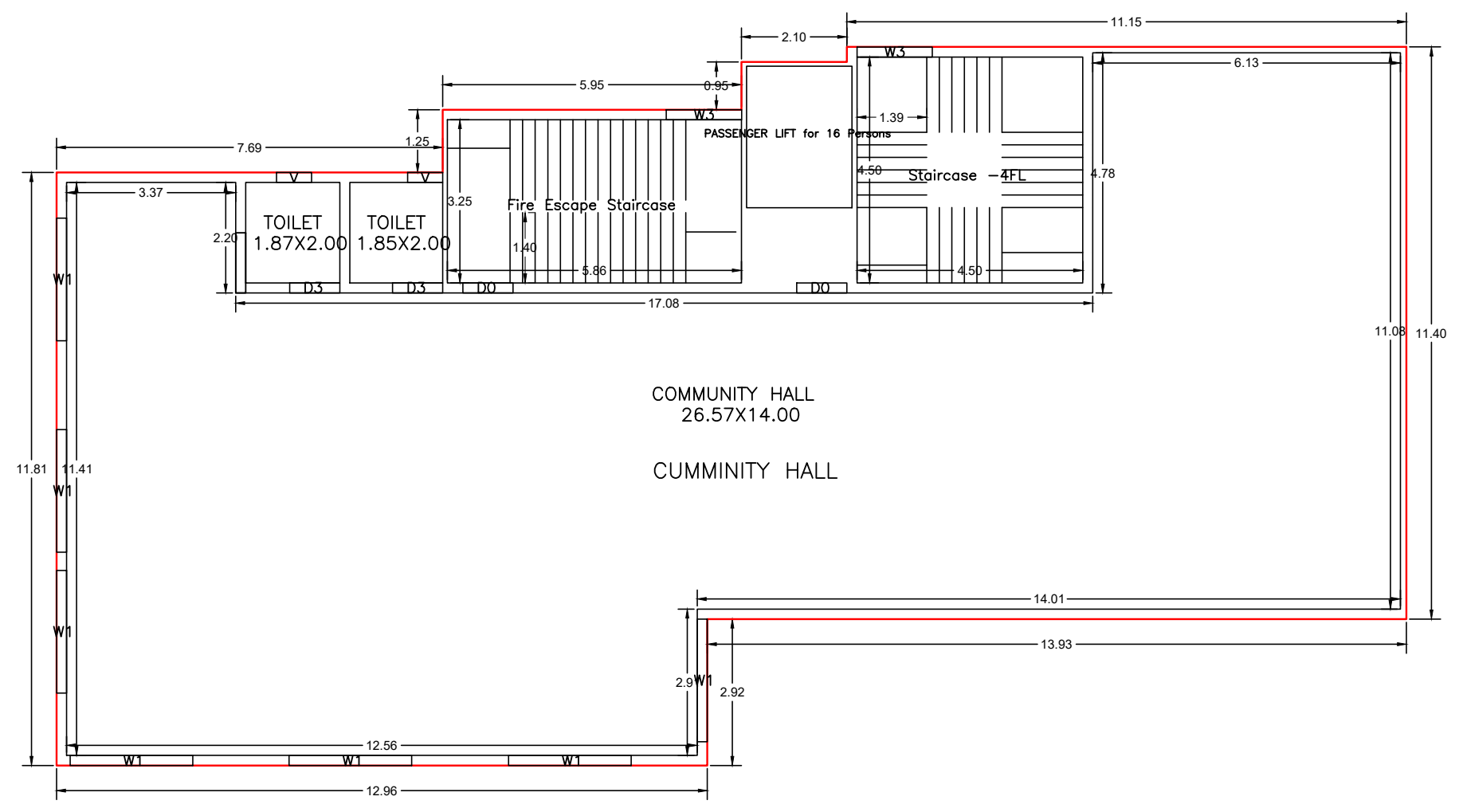
TOILET 1.87X2.00
TOILET 1.85X2.00
Fire Escape Staircase
PASSENGER LIFT for 16 Persons
COMMUNITY HALL 26.57X14.00
CUMMINITY HALL

THIRD FLOOR PLAN
(Proposed)
(SCALE 1:100)

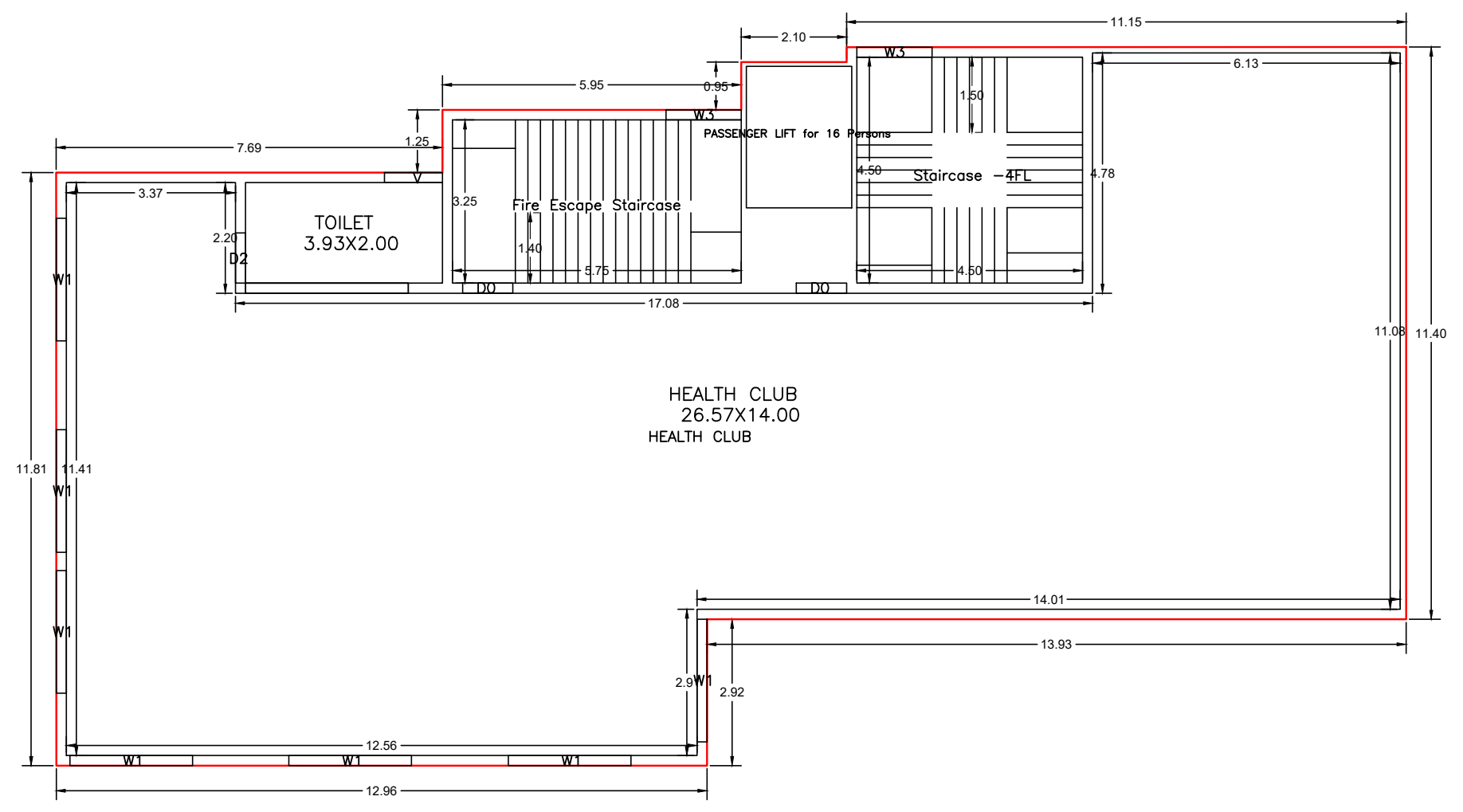
TOILET 3.93X2.00
Fire Escape Staircase
PASSENGER LIFT for 16 Persons
HEALTH CLUB 26.57X14.00
HEALTH CLUB

FOURTH FLOOR PLAN
(Proposed)
(SCALE 1:100)

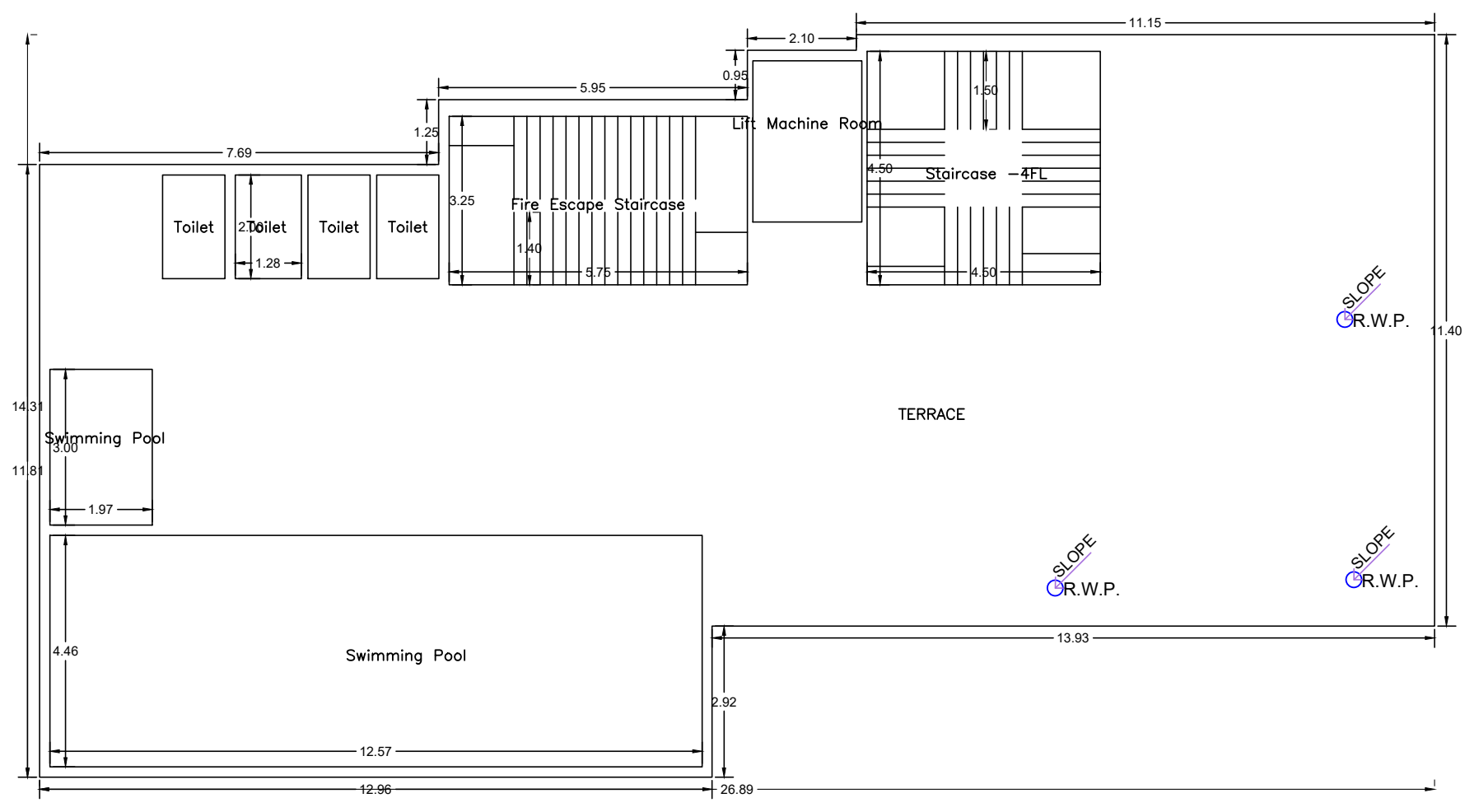
Toilet
Toilet
Toilet
Toilet
Fire Escape Staircase
Lift Machine Room
Swimming Pool
TERRACE
Swimming Pool
SLOPE
R.W.P.
R.W.P.
R.W.P.

TERRACE FLOOR PLAN
(SCALE 1:100)

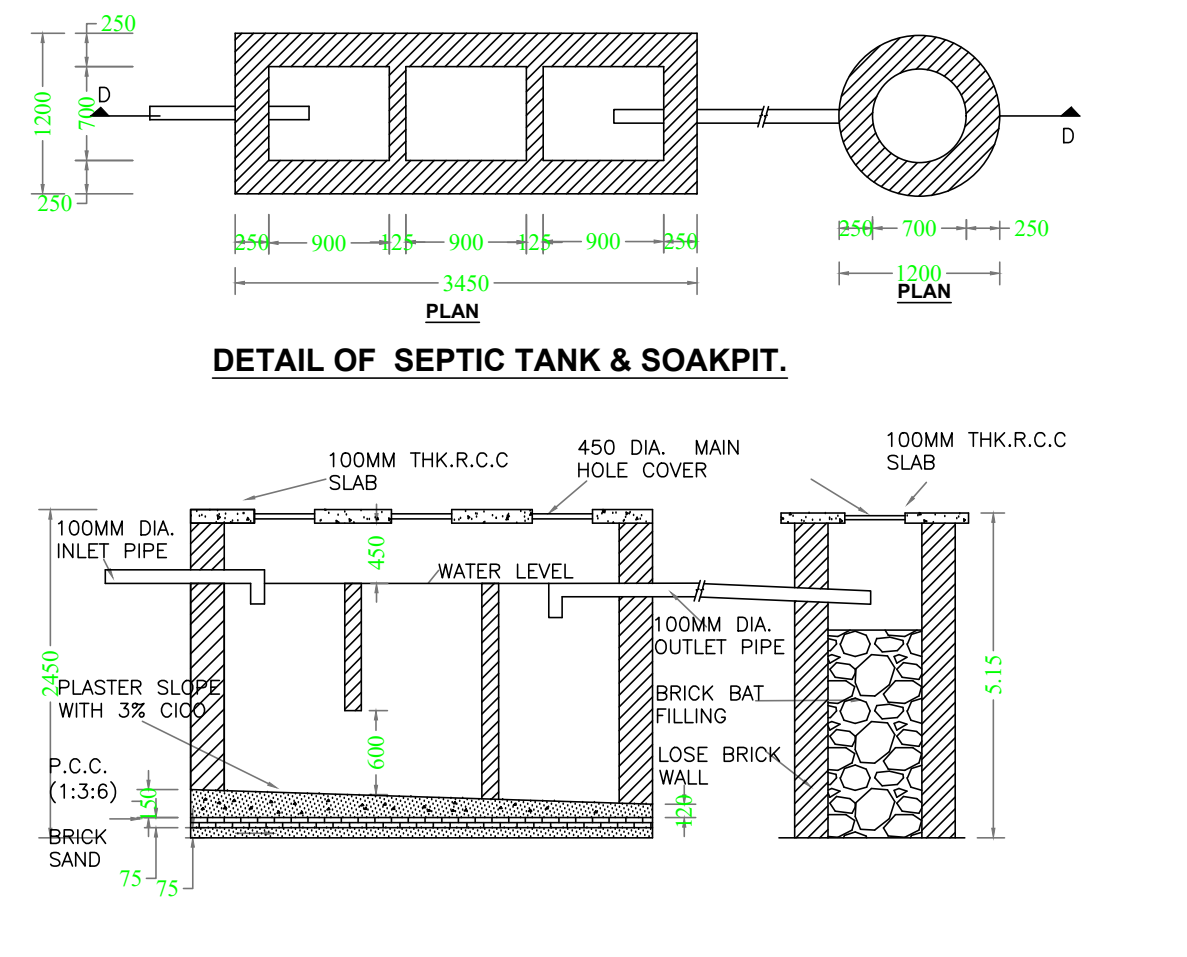
PLAN
PLAN
D
D
250
700
1200
3450
900
125
100MM THK.R.C.C SLAB
450 DIA. MAIN HOLE COVER
100MM DIA. INLET PIPE
WATER LEVEL
100MM DIA. OUTLET PIPE
PLASTER SLOPE WITH 3% CICO
BRICK BAT FILLING
P.C.C. (1:3:6)
LOSE BRICK WALL
BRICK
SAND
2450
450
600
150
75
5.15

DETAIL OF SEPTIC TANK & SOAKPIT.

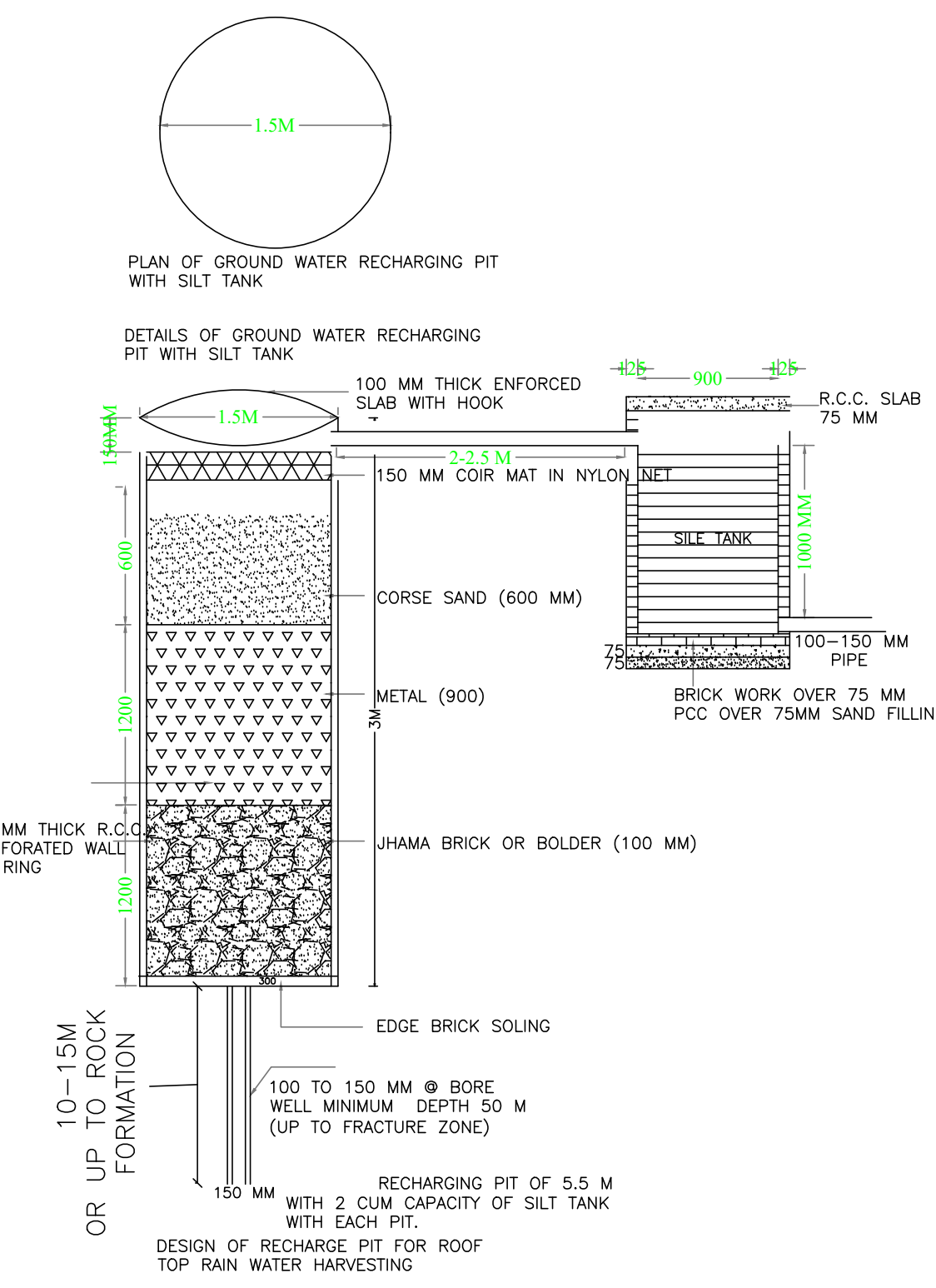
1.5M
PLAN OF GROUND WATER RECHARGING PIT WITH SILT TANK
DETAILS OF GROUND WATER RECHARGING PIT WITH SILT TANK
100 MM THICK ENFORCED SLAB WITH HOOK
R.C.C. SLAB 75 MM
2-2.5 M
150 MM COIR MAT IN NYLON NET
SILE TANK
1000 MM
CORSE SAND (600 MM)
100-150 MM PIPE
METAL (900)
BRICK WORK OVER 75 MM PCC OVER 75MM SAND FILLING
75 MM THICK R.C.C. PERFORATED WALL OR RING
JHAMA BRICK OR BOLDER (100 MM)
3M
EDGE BRICK SOLING
10-15M OR UP TO ROCK FORMATION
100 TO 150 MM @ BORE WELL MINIMUM DEPTH 50 M (UP TO FRACTURE ZONE)
150 MM
RECHARGING PIT OF 5.5 M WITH 2 CUM CAPACITY OF SILT TANK WITH EACH PIT.
DESIGN OF RECHARGE PIT FOR ROOF TOP RAIN WATER HARVESTING

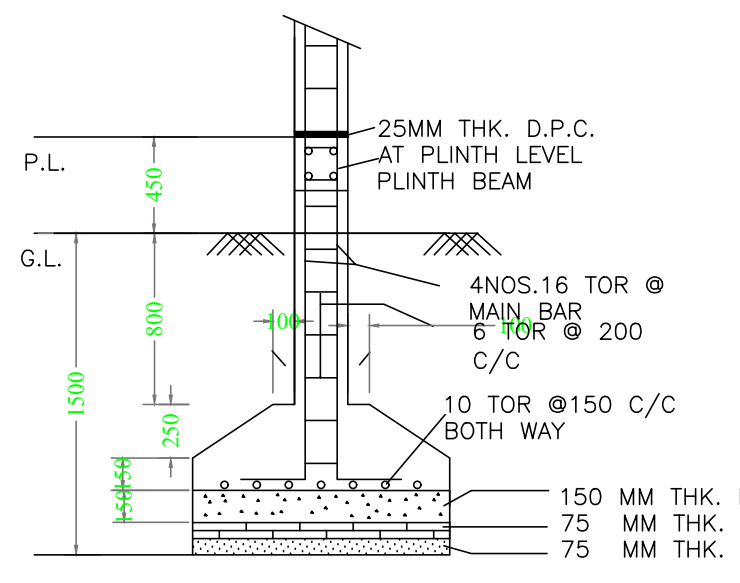
P.L.
G.L.
25MM THK. D.P.C. AT PLINTH LEVEL
PLINTH BEAM
4NOS.16 TOR @ MAIN BAR
6 TOR @ 200 C/C
10 TOR @150 C/C BOTH WAY
150 MM THK. P.C.C. (1:4:8)
75 MM THK. BRICK SOLING.
75 MM THK. SAND FILLING.
450
800
1500
250
100

SECTION -CC

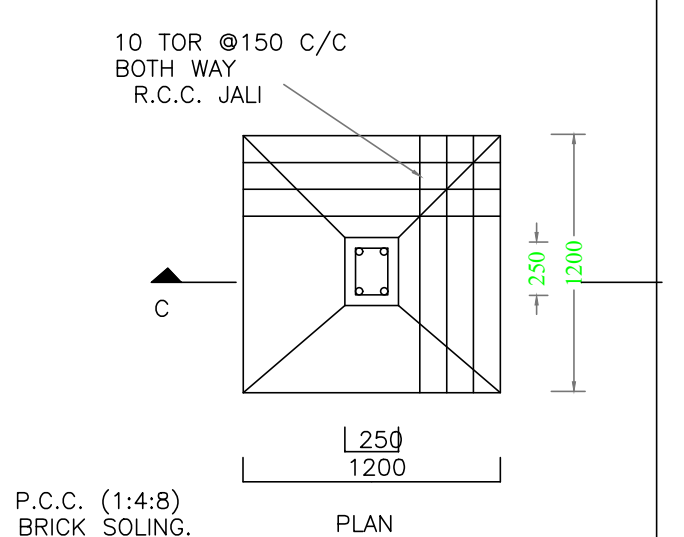
10 TOR @150 C/C BOTH WAY R.C.C. JALI
C
250
1200
PLAN

DETAIL OF FOUNDATION

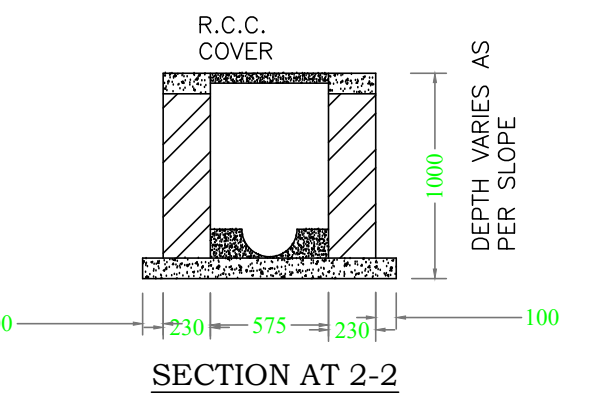
R.C.C. COVER
DEPTH VARIES AS PER SLOPE
1000
100
230
575

SECTION AT 2-2

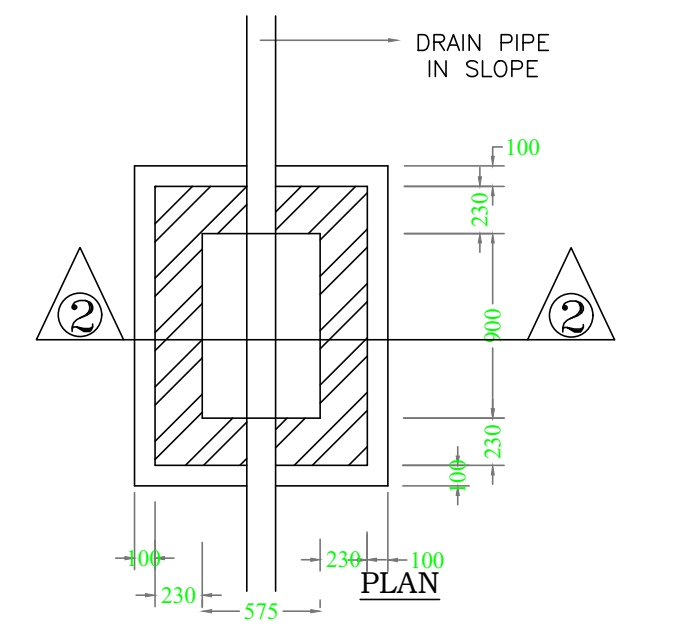
DRAIN PIPE IN SLOPE
2
2
100
230
900
575
PLAN

I.C.DETAILS

Building :A (COMMUNITY HALL)

Floor Name	Gross Builtup Area	Deductions From Gross BUA(Area in Sq.mt.)	Total Built Up Area (Sq.mt.)	Deductions (Area in Sq.mt.)				Proposed FAR Area (Sq.mt.)			Total FAR Area (Sq.mt.)	Total Consumed Additional FAR Area (Sq.mt.)	Tnmt (No.)
		Cutout		StairCase	Lift	Accessory Use	Parking	Commercial	Assembly	Public Utility			
Ground Floor	285.20	93.38	191.82	38.94	5.67	3.78	84.09	59.34	0.00	0.00	59.34	59.34	01
First Floor	272.82	88.34	184.48	38.93	0.00	22.67	0.00	0.00	122.88	0.00	122.88	122.88	01
Second Floor	284.61	58.83	225.78	18.69	5.92	3.12	0.00	0.00	198.05	0.00	198.05	198.05	01
Third Floor	317.02	0.00	317.02	19.04	5.92	0.00	0.00	0.00	292.06	0.00	292.06	292.06	01
Fourth Floor	317.02	0.00	317.02	18.69	5.92	0.00	0.00	0.00	0.00	292.41	292.41	292.41	01
Terrace Floor	71.76	0.00	71.76	0.00	0.00	71.76	0.00	0.00	0.00	0.00	0.00	0.00	00
Total :	1548.43	240.55	1307.88	134.29	23.43	101.33	84.09	59.34	613.00	292.41	964.74	964.74	05
Total Number of Same Buildings :	1												
Total :	1548.43	240.55	1307.88	134.29	23.43	101.33	84.09	59.34	613.00	292.41	964.74	964.74	05

SCHEDULE OF DOOR:

BUILDING NAME	NAME	LENGTH	HEIGHT	NOS
A (COMMUNITY HALL)	D3	0.75	2.13	05
A (COMMUNITY HALL)	D2	1.00	2.13	02
A (COMMUNITY HALL)	D0	1.00	2.13	06
A (COMMUNITY HALL)	D3	1.00	2.13	02
A (COMMUNITY HALL)	D2	1.10	2.13	04
A (COMMUNITY HALL)	D	1.50	2.13	02

SCHEDULE OF WINDOW/VENTILATION:

BUILDING NAME	NAME	LENGTH	HEIGHT	NOS
A (COMMUNITY HALL)	MECH VENT	0.65	2.70	01
A (COMMUNITY HALL)	V	0.70	2.70	06
A (COMMUNITY HALL)	V	0.95	2.70	01
A (COMMUNITY HALL)	V	1.16	2.70	01
A (COMMUNITY HALL)	W3	1.50	2.70	04
A (COMMUNITY HALL)	W	1.51	2.70	01
A (COMMUNITY HALL)	W	1.56	2.70	01
A (COMMUNITY HALL)	W	1.69	2.70	01
A (COMMUNITY HALL)	W	1.77	2.70	01
A (COMMUNITY HALL)	W1	2.44	2.70	16
A (COMMUNITY HALL)	MECH VENT	3.00	2.70	01
A (COMMUNITY HALL)	W2	3.00	2.70	02

UnitBUA Table for Building :A (COMMUNITY HALL)

FLOOR	Name	UnitBUA Type	UnitBUA Area	Carpet Area	No. of Rooms	No. of Tenement
GROUND FLOOR PLAN	RETAIL SHOP	SHOP	45.65	45.58	2	1
FIRST FLOOR PLAN	GUEST ROOM AND PANTRY	OTHER	98.92	98.71	8	1
SECOND FLOOR PLAN	GYMNASIA	OTHER	162.92	162.66	2	1
THIRD FLOOR PLAN	CUMMINITY HALL	OTHER	249.77	249.53	3	1
FOURTH FLOOR PLAN	HEALTH CLUB	OTHER	249.77	249.11	2	1
Total:	-	-	807.03	805.59	17	5

LTP NAME AND SIGNATURE	STRUCTURAL ENG'S NAME AND SIGNATURE	BUILDER NAME AND SIGNATURE	DIGITAL SIGNATURE
ANOOP KUMAR JMP/ENG/0001/2020			

Name : MOTAY BANRA
Designation : Executive Officer
Organization : Personal

This is system generated MAP. No need to Physically Signed.

ISO_full_bleed_2A0_(1189.00_x_1682.00_MM)